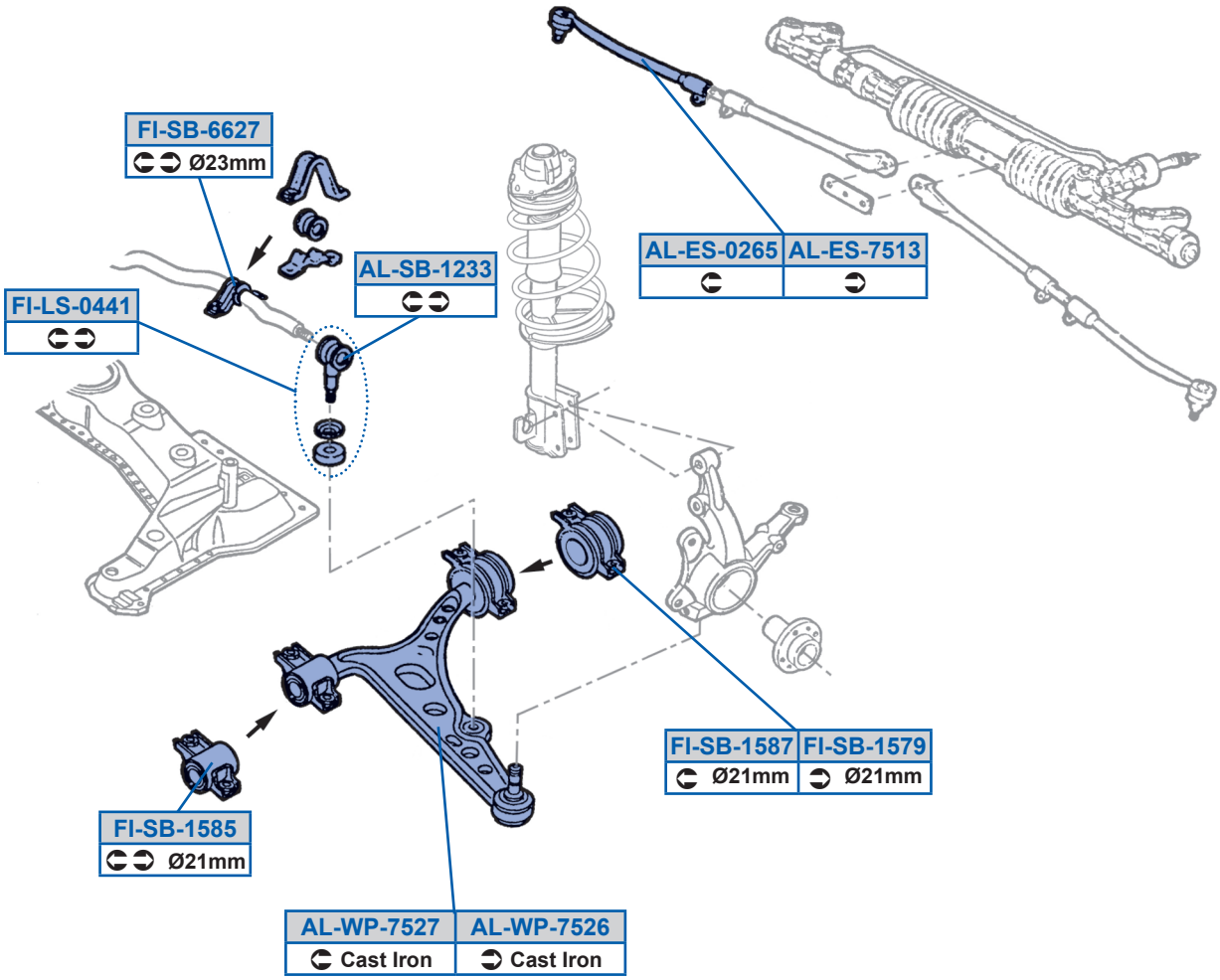
FI-SB-6627
Ø23mm
AL-SB-1233
FI-LS-0441
AL-ES-0265
AL-ES-7513
FI-SB-1587
Ø21mm
FI-SB-1579
Ø21mm
FI-SB-1585
Ø21mm
AL-WP-7527
Cast Iron
AL-WP-7526
Cast Iron

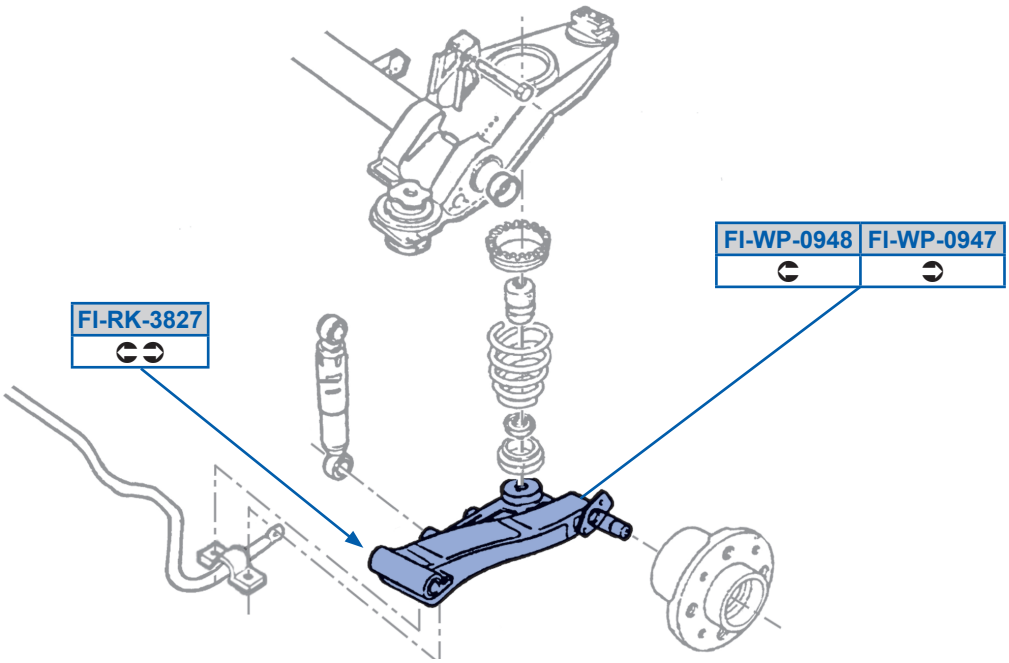
FI-WP-0948
FI-WP-0947
FI-RK-3827