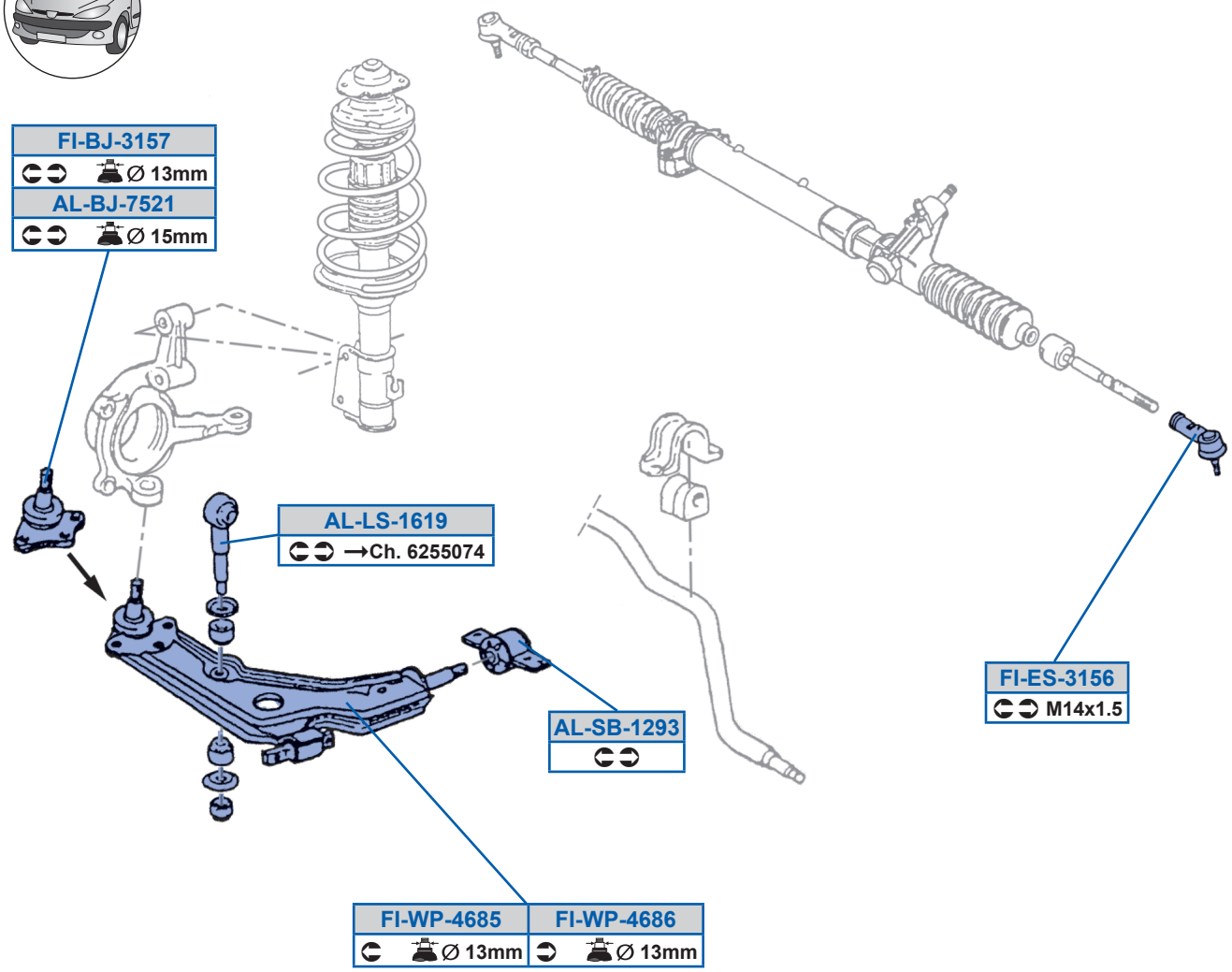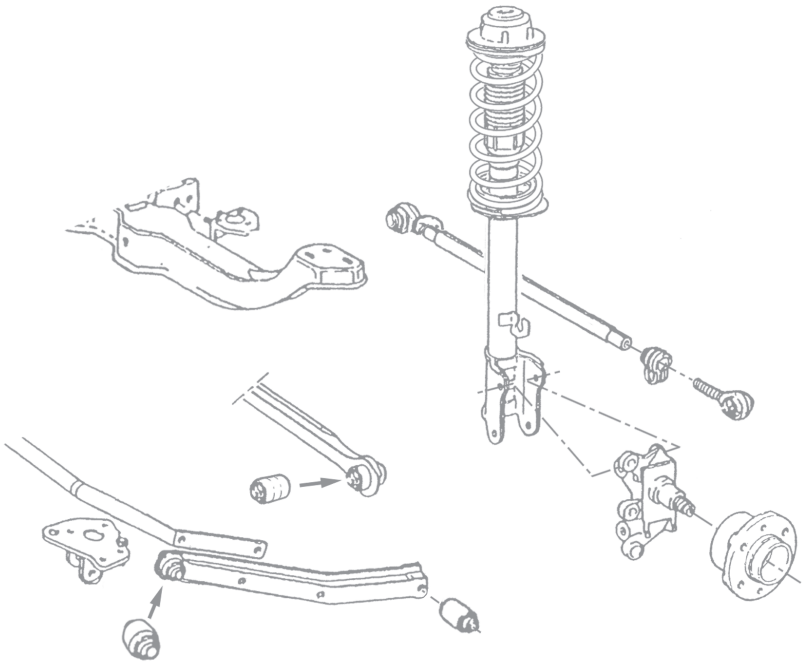
FI-BJ-3157
Ø 13mm
AL-BJ-7521
Ø 15mm
AL-LS-1619
→Ch. 6255074
AL-SB-1293
FI-ES-3156
M14x1.5
FI-WP-4685
Ø 13mm
FI-WP-4686
Ø 13mm