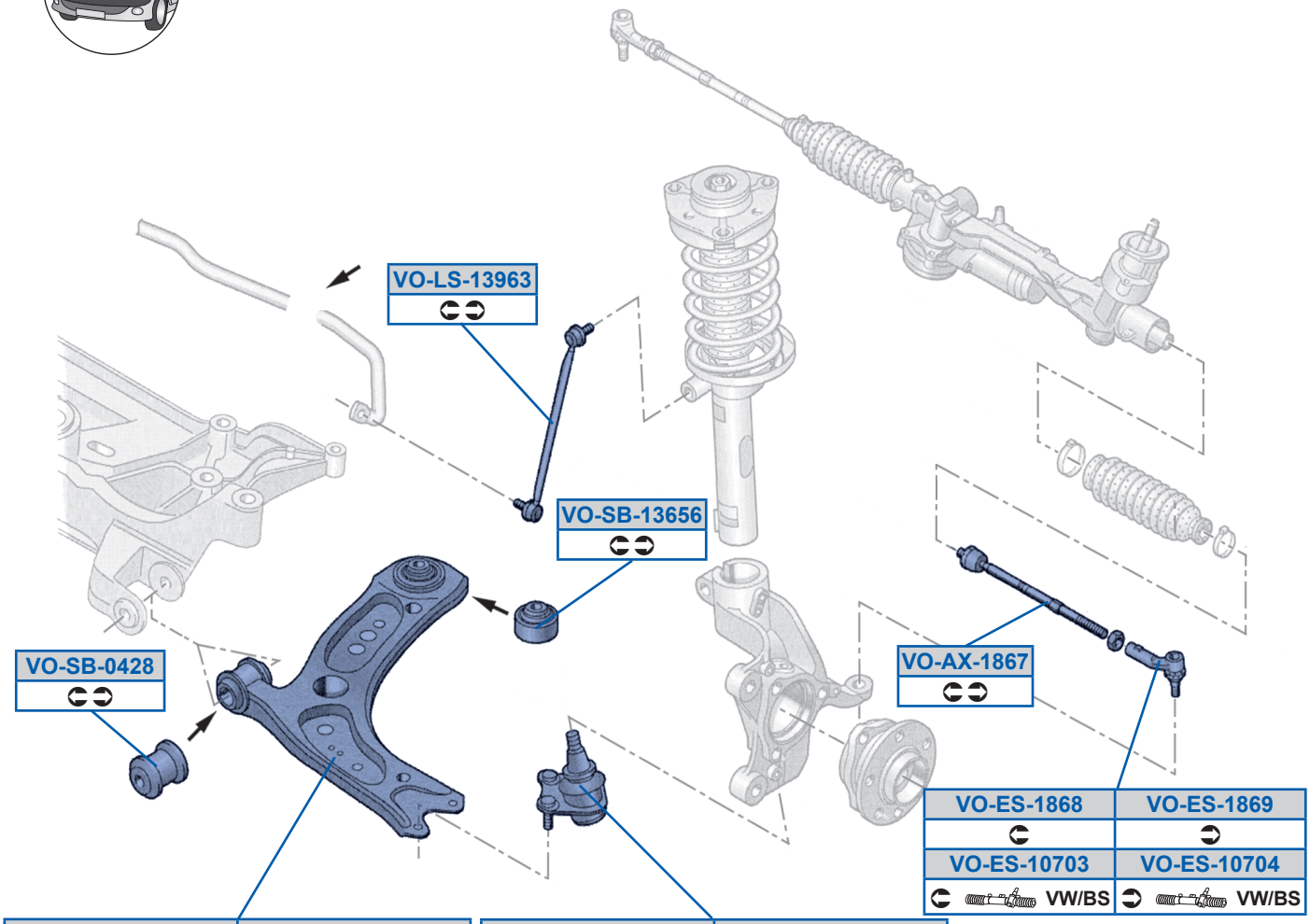
VO-LS-13963
VO-SB-13656
VO-SB-0428
VO-AX-1867
VO-ES-1868
VO-ES-1869
VO-ES-10703
VO-ES-10704
VW/BS
VW/BS
VO-WP-13841
PR 1ZE/1ZF/1ZP
VO-WP-13842
PR 1ZE/1ZF/1ZP
VO-WP-13839
PR 1LC/1LJ/1ZA/1ZD
VO-WP-13840
PR 1LC/1LJ/1ZA/1ZD
VO-BJ-13581
PR 1ZE/1ZF/1ZP
VO-BJ-13582
PR 1ZE/1ZF/1ZP
VO-BJ-5011
PR 1LC/1LJ/1ZA/1ZD
VO-BJ-5012
PR 1LC/1LJ/1ZA/1ZD

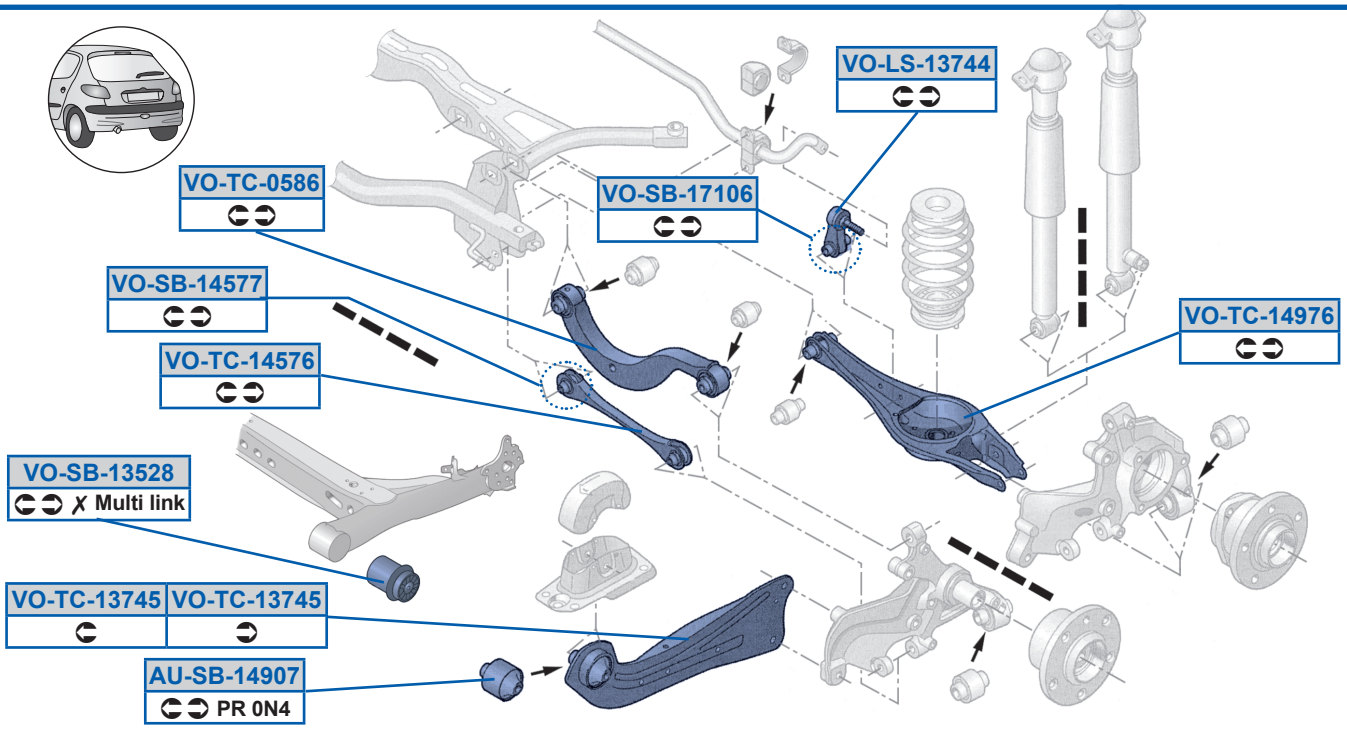
VO-LS-13744
VO-TC-0586
VO-SB-17106
VO-SB-14577
VO-TC-14576
VO-TC-14976
VO-SB-13528
✗ Multi link
VO-TC-13745
VO-TC-13745
AU-SB-14907
PR 0N4