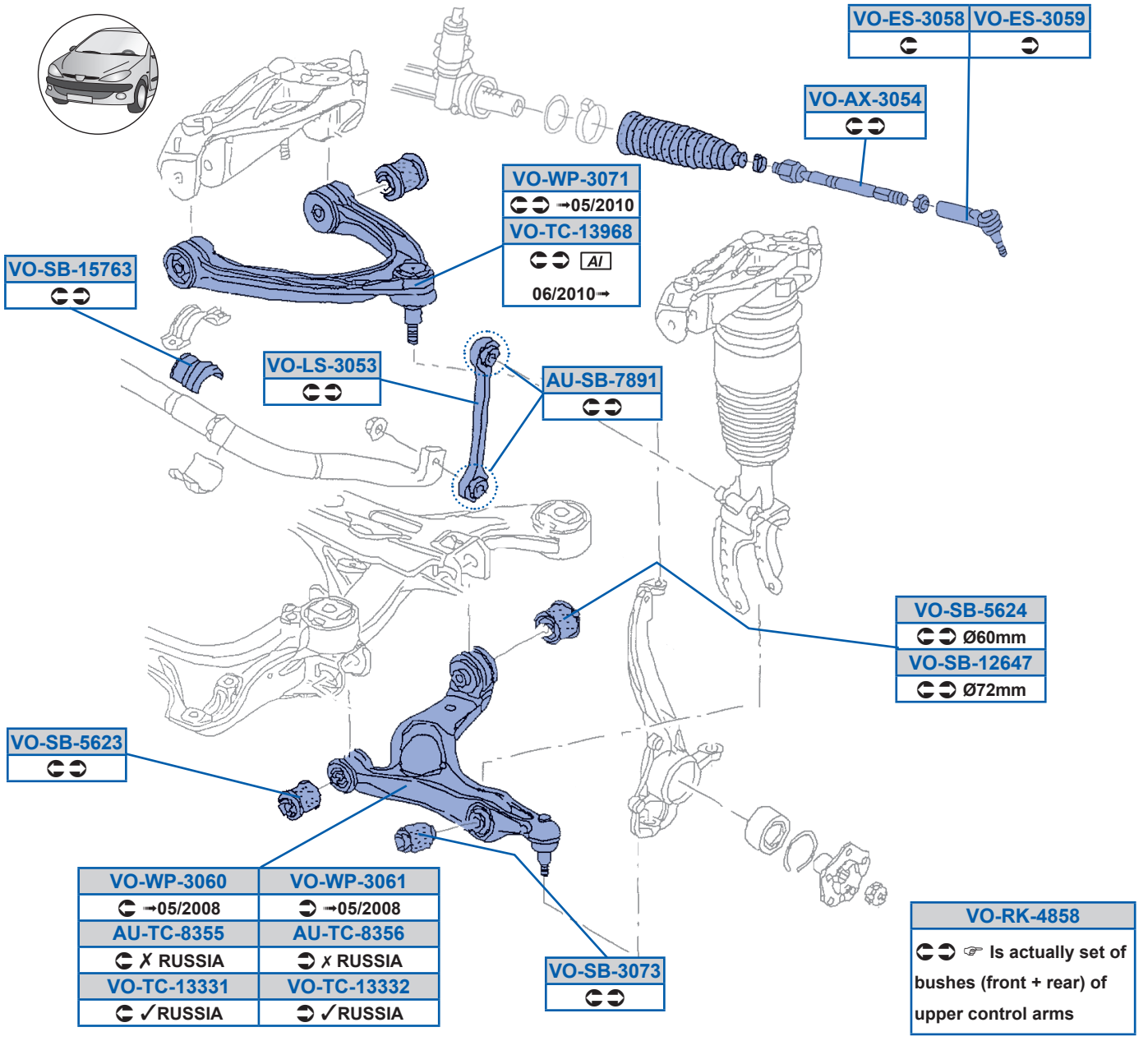
VO-ES-3058
VO-ES-3059
VO-AX-3054
VO-WP-3071
→05/2010
VO-TC-13968
AI
06/2010→
VO-SB-15763
VO-LS-3053
AU-SB-7891
VO-SB-5624
Ø60mm
VO-SB-12647
Ø72mm
VO-SB-5623
VO-WP-3060
VO-WP-3061
→05/2008
→05/2008
AU-TC-8355
AU-TC-8356
✗ RUSSIA
✗ RUSSIA
VO-TC-13331
VO-TC-13332
✓RUSSIA
✓RUSSIA
VO-SB-3073
VO-RK-4858
☞ Is actually set of bushes (front + rear) of upper control arms

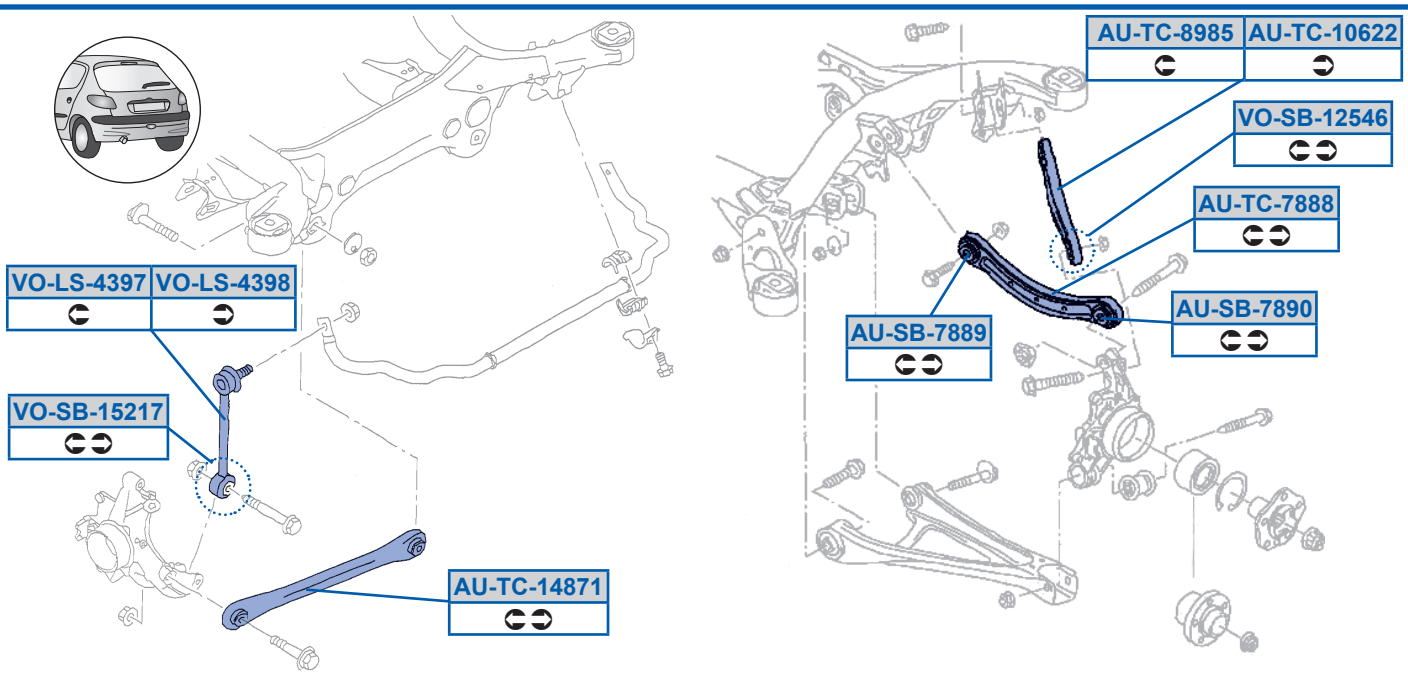
AU-TC-8985
AU-TC-10622
VO-SB-12546
AU-TC-7888
VO-LS-4397
VO-LS-4398
AU-SB-7890
AU-SB-7889
VO-SB-15217
AU-TC-14871