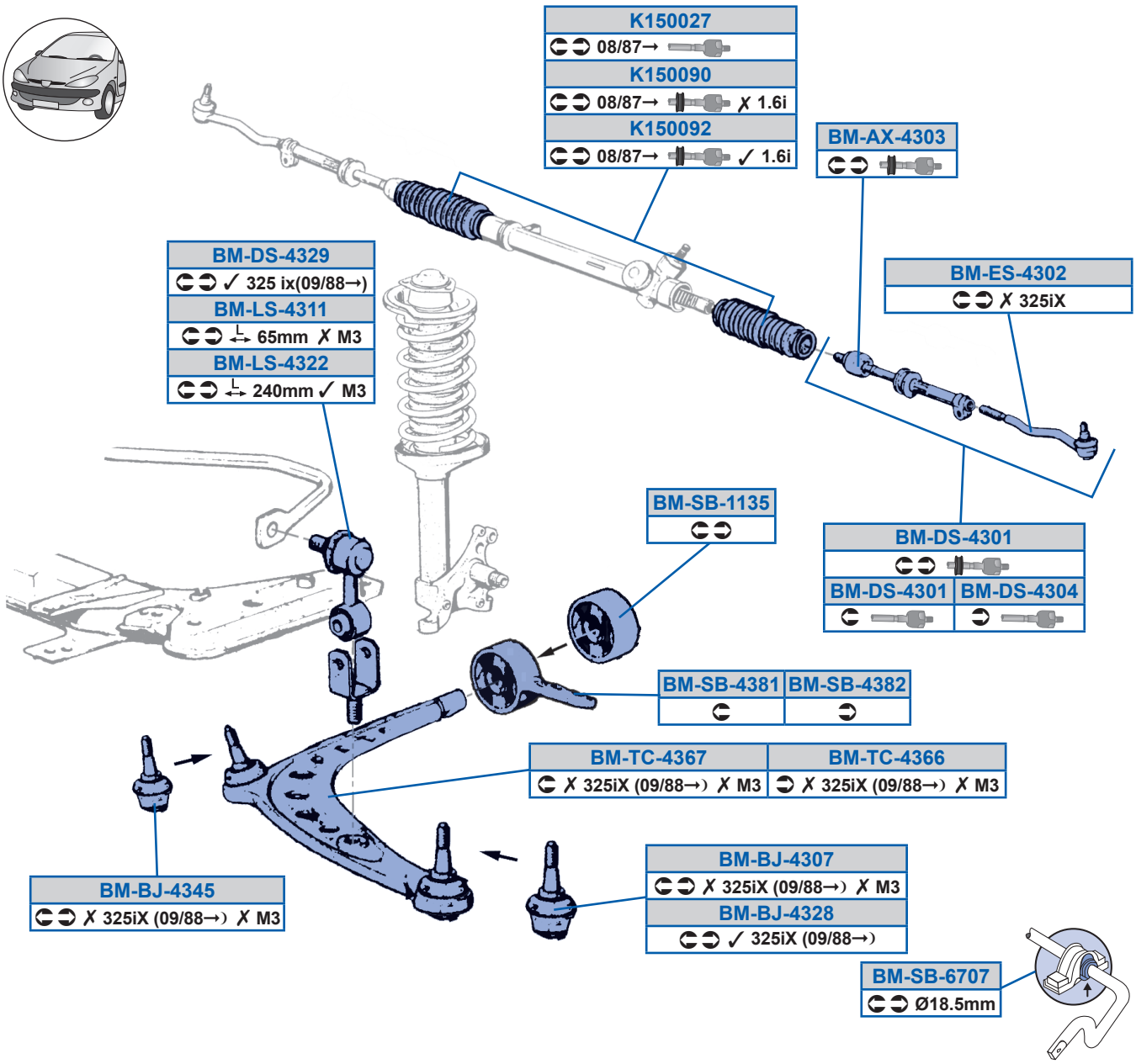
K150027
08/87→
K150090
08/87→ ✗ 1.6i
K150092
08/87→ ✓ 1.6i
BM-AX-4303
BM-ES-4302
✗ 325iX
BM-DS-4329
✓ 325 ix(09/88→)
BM-LS-4311
65mm ✗ M3
BM-LS-4322
240mm ✓ M3
BM-SB-1135
BM-DS-4301
BM-DS-4301
BM-DS-4304
BM-SB-4381
BM-SB-4382
BM-TC-4367
✗ 325iX (09/88→) ✗ M3
BM-TC-4366
✗ 325iX (09/88→) ✗ M3
BM-BJ-4345
✗ 325iX (09/88→) ✗ M3
BM-BJ-4307
✗ 325iX (09/88→) ✗ M3
BM-BJ-4328
✓ 325iX (09/88→)
BM-SB-6707
Ø18.5mm

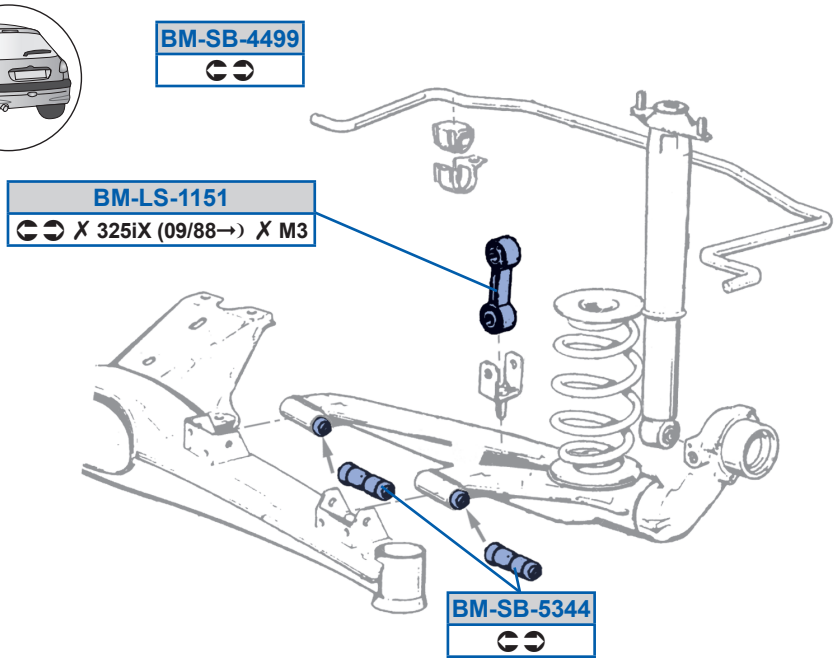
BM-SB-4499
BM-LS-1151
✗ 325iX (09/88→) ✗ M3
BM-SB-5344