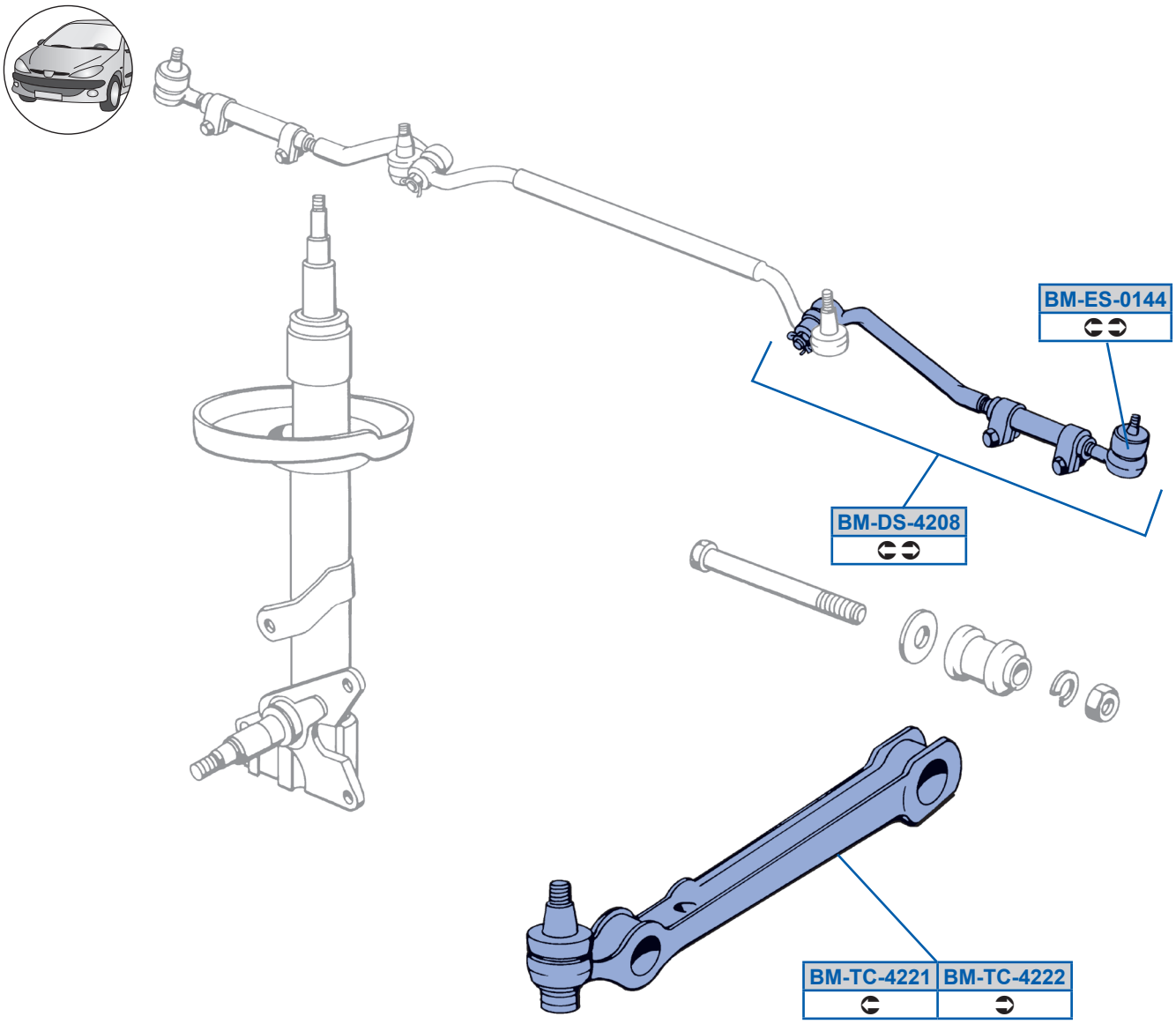
BM-ES-0144
BM-DS-4208
BM-TC-4221
BM-TC-4222