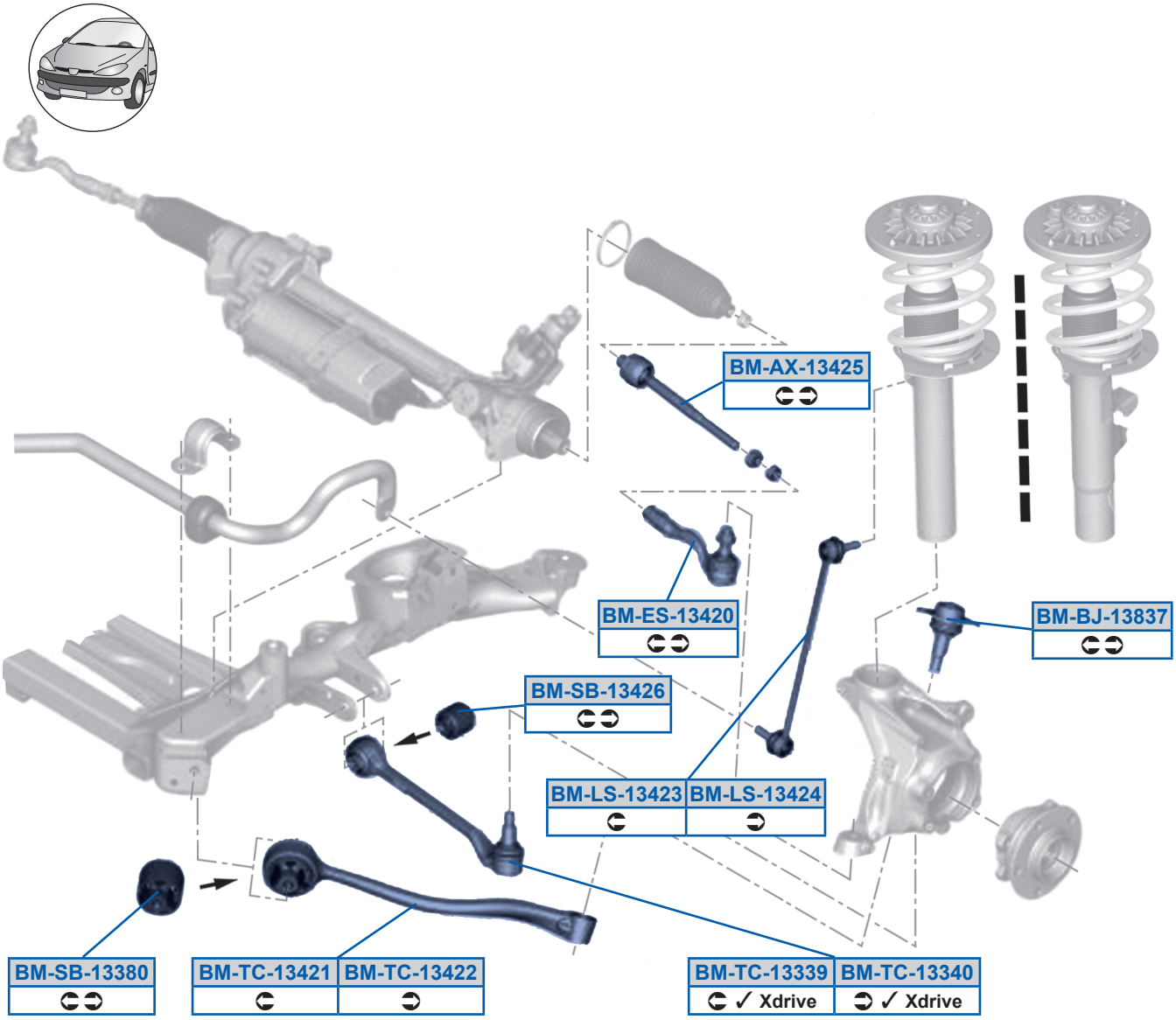
BM-AX-13425
BM-ES-13420
BM-BJ-13837
BM-SB-13426
BM-LS-13423
BM-LS-13424
BM-SB-13380
BM-TC-13421
BM-TC-13422
BM-TC-13339
✓ Xdrive
BM-TC-13340
✓ Xdrive

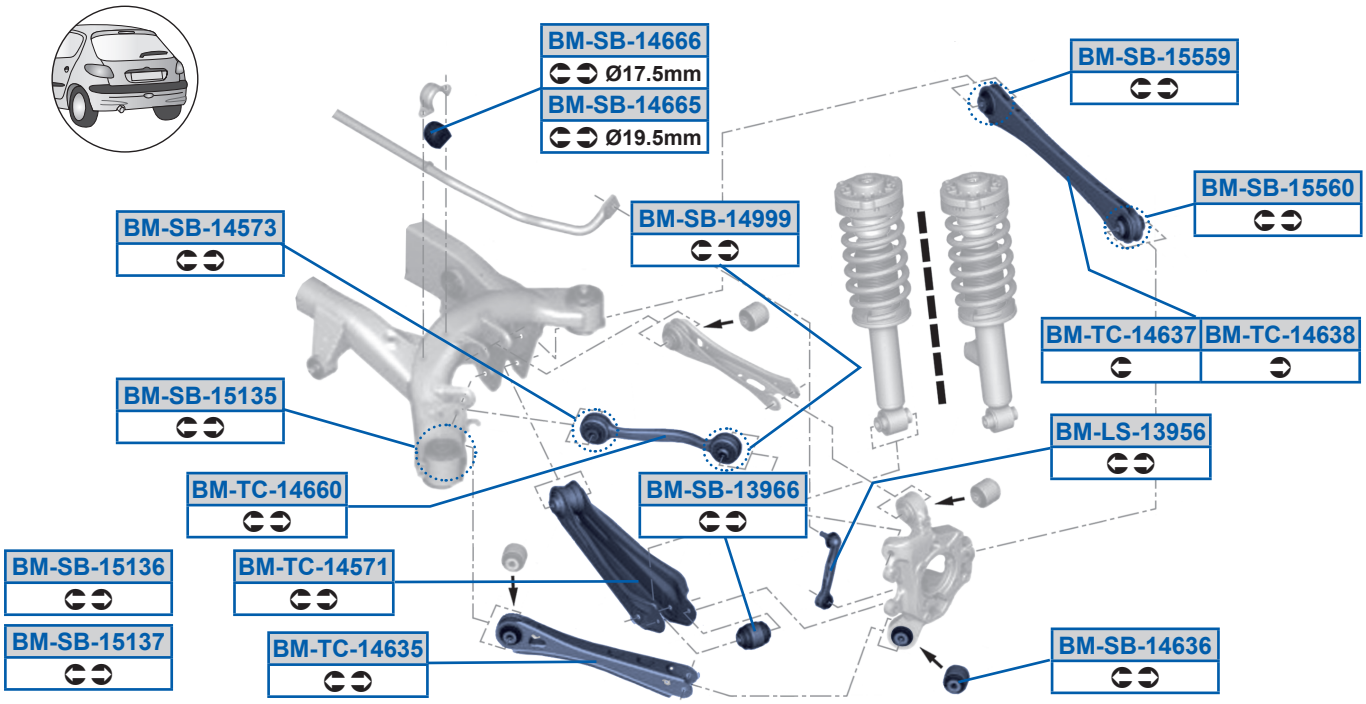
BM-SB-14666
Ø17.5mm
BM-SB-14665
Ø19.5mm
BM-SB-15559
BM-SB-15560
BM-SB-14573
BM-SB-14999
BM-TC-14637
BM-TC-14638
BM-SB-15135
BM-LS-13956
BM-TC-14660
BM-SB-13966
BM-SB-15136
BM-TC-14571
BM-SB-15137
BM-TC-14635
BM-SB-14636