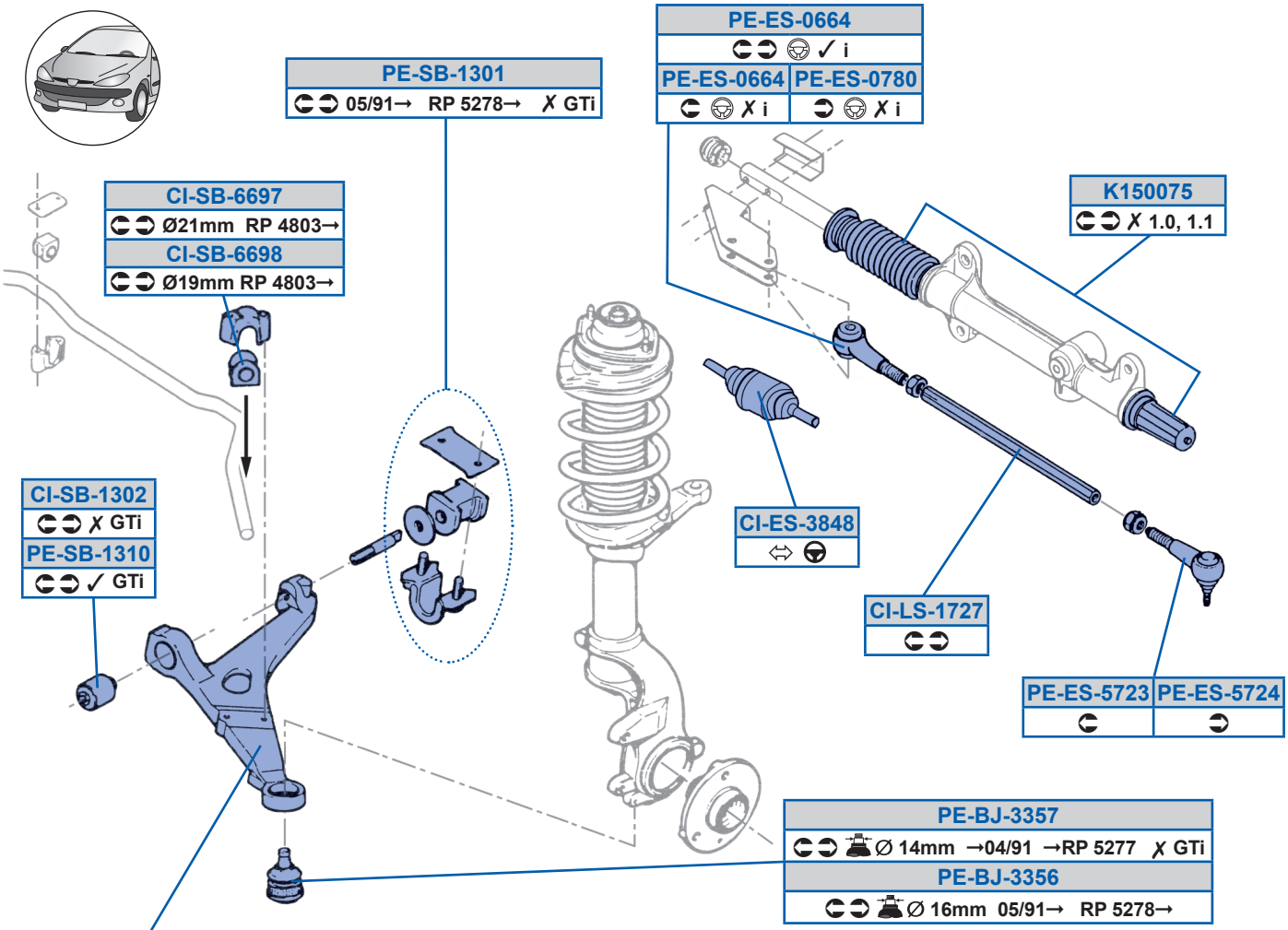
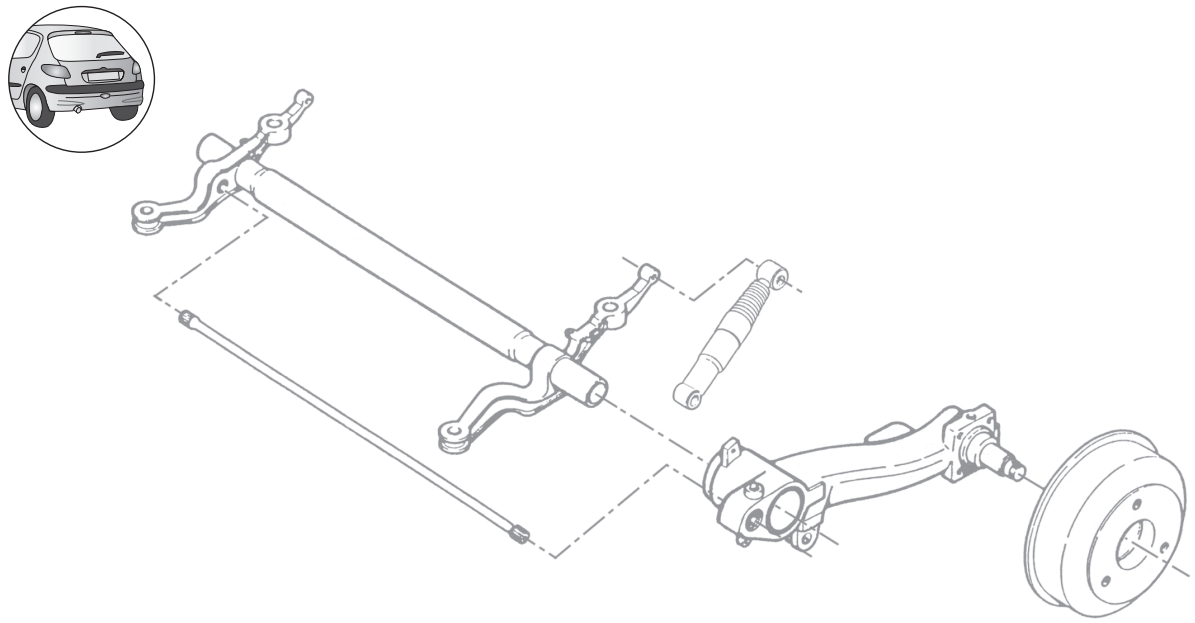
CI-WP-5028	CI-WP-5027
Ø 14mm →04/91 →RP 5277 ✗ GTi	Ø 14mm →04/91 →RP 5277 ✗ GTi
PE-WP-6980	**PE-WP-6979**
Ø 16mm 05/91→ RP 5278→ ✗ GTi	Ø 16mm 05/91→ RP 5278→ ✗ GTi
PE-WP-0626	**PE-WP-0627**
✓GTi	✓ GTi