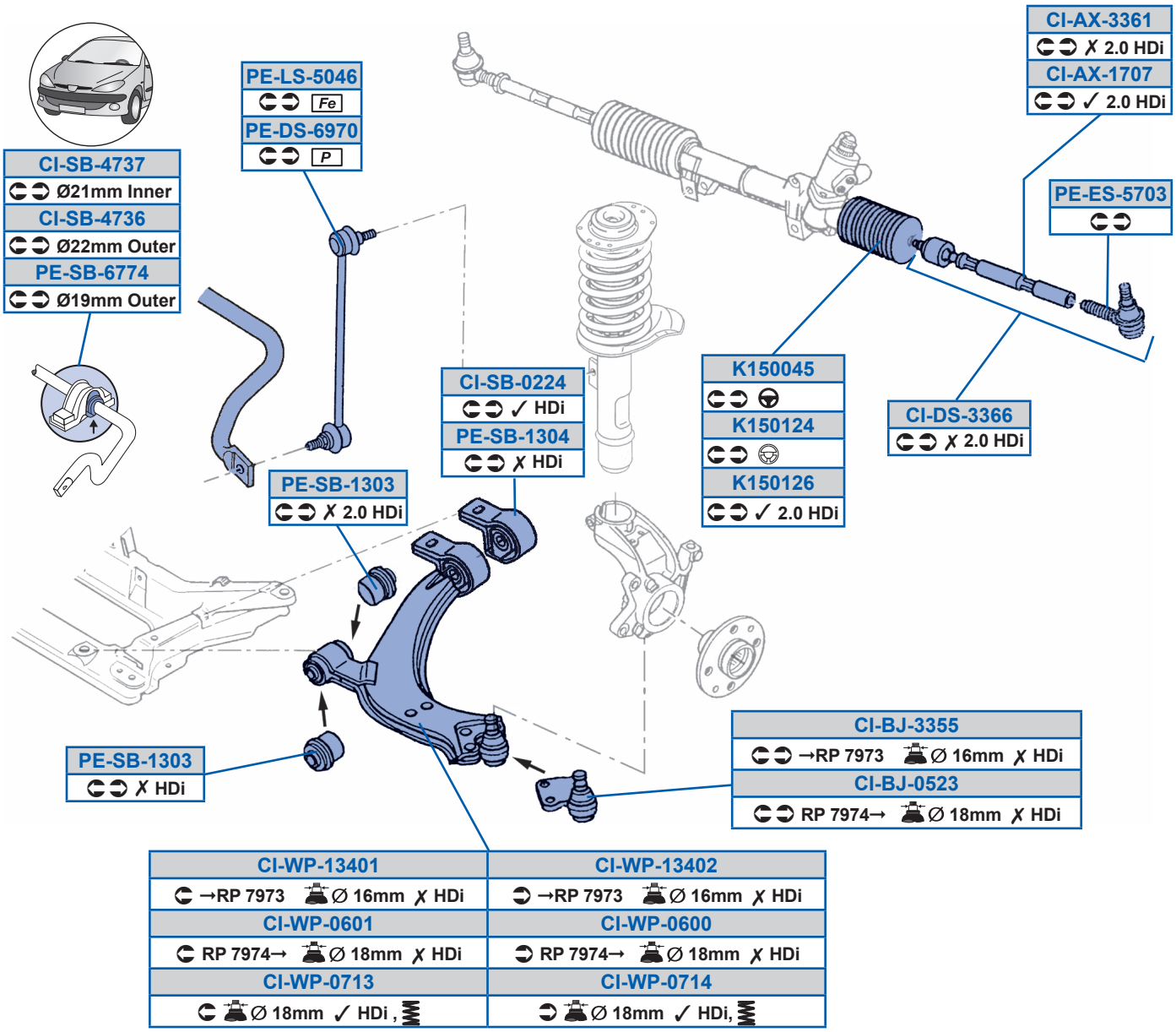
CI-SB-4737
Ø21mm Inner
CI-SB-4736
Ø22mm Outer
PE-SB-6774
Ø19mm Outer
PE-LS-5046
Fe
PE-DS-6970
P
CI-AX-3361
✗ 2.0 HDi
CI-AX-1707
✓ 2.0 HDi
PE-ES-5703
K150045
K150124
K150126
✓ 2.0 HDi
CI-DS-3366
✗ 2.0 HDi
CI-SB-0224
✓ HDi
PE-SB-1304
✗ HDi
PE-SB-1303
✗ 2.0 HDi
PE-SB-1303
✗ HDi
CI-BJ-3355
→RP 7973 Ø 16mm ✗ HDi
CI-BJ-0523
RP 7974→ Ø 18mm ✗ HDi
CI-WP-13401
→RP 7973 Ø 16mm ✗ HDi
CI-WP-13402
→RP 7973 Ø 16mm ✗ HDi
CI-WP-0601
RP 7974→ Ø 18mm ✗ HDi
CI-WP-0600
RP 7974→ Ø 18mm ✗ HDi
CI-WP-0713
Ø 18mm ✓ HDi ,
CI-WP-0714
Ø 18mm ✓ HDi,

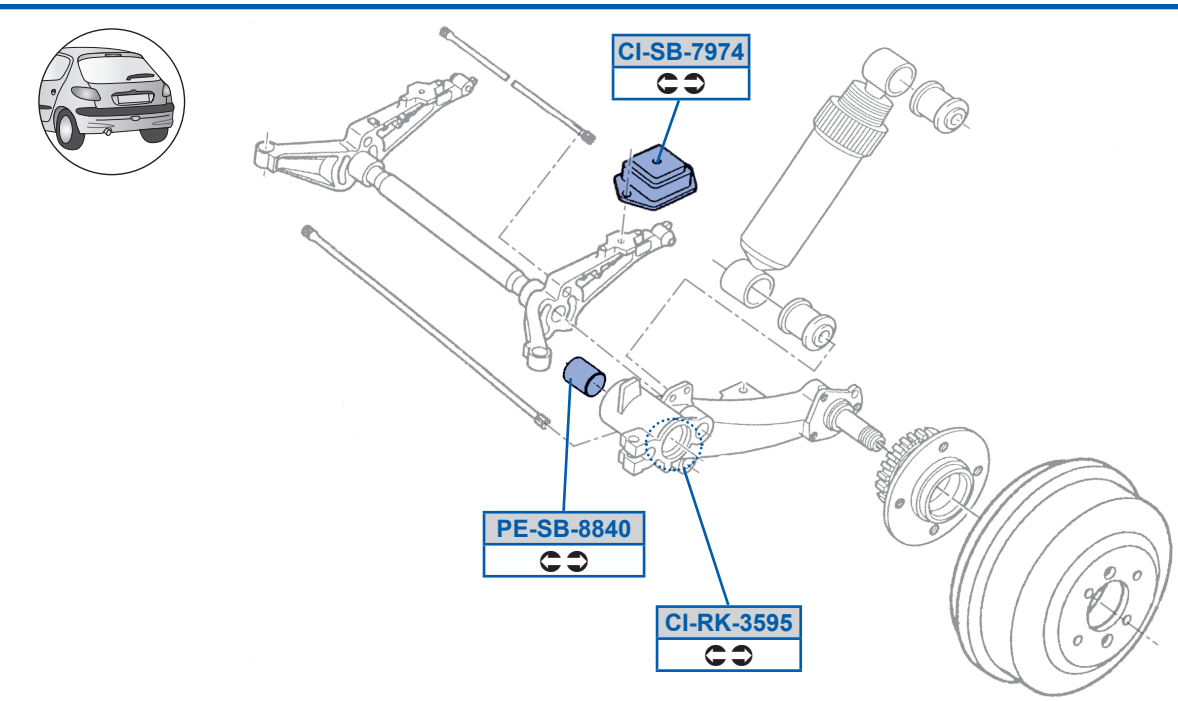
CI-SB-7974
PE-SB-8840
CI-RK-3595