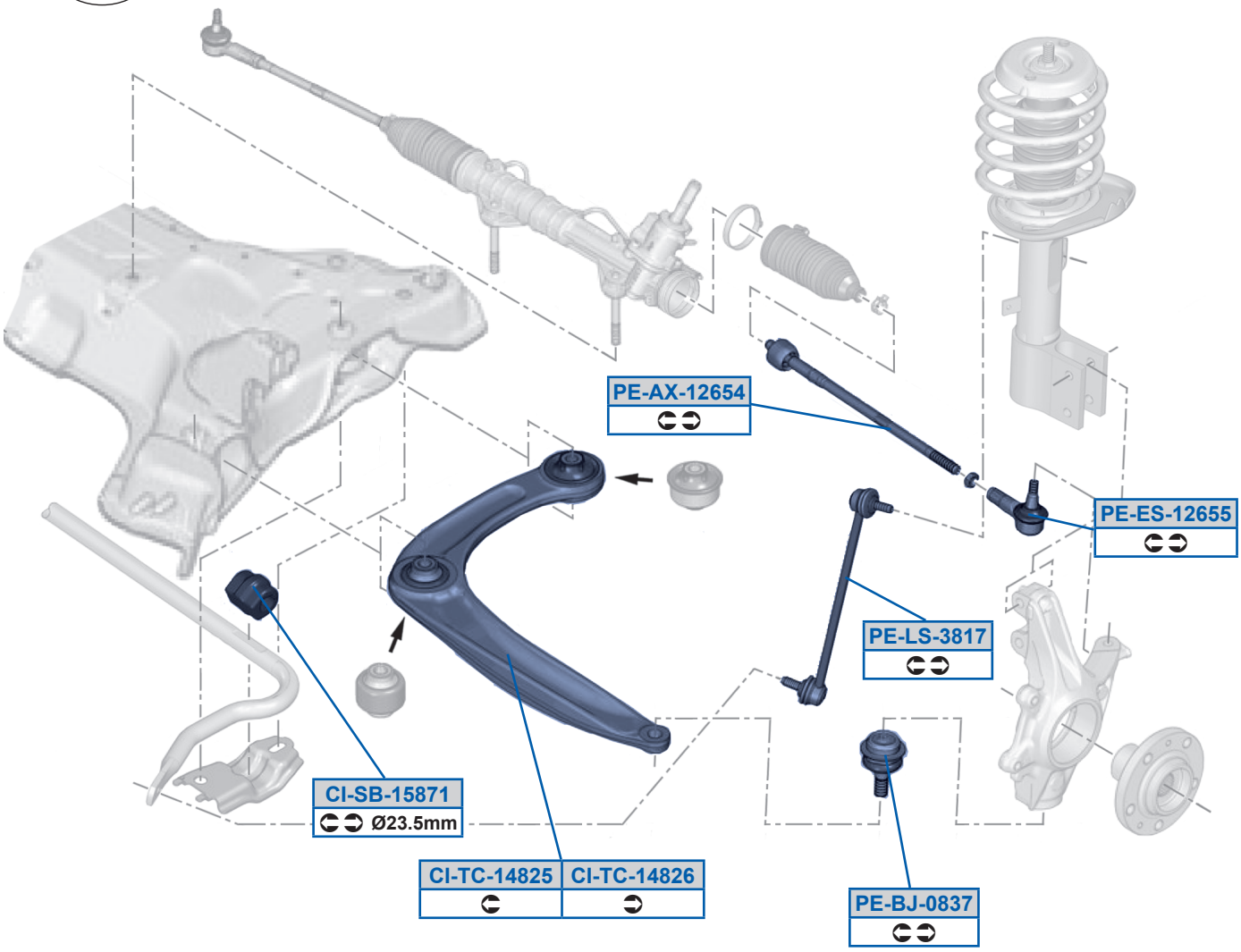

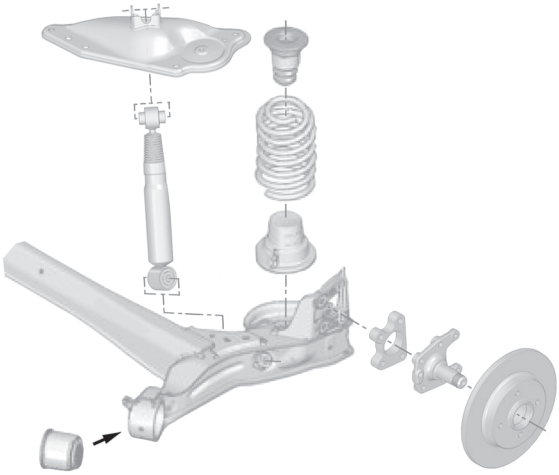

PE-TC-10715	PE-TC-10716
✓ 4x4	✓ 4x4