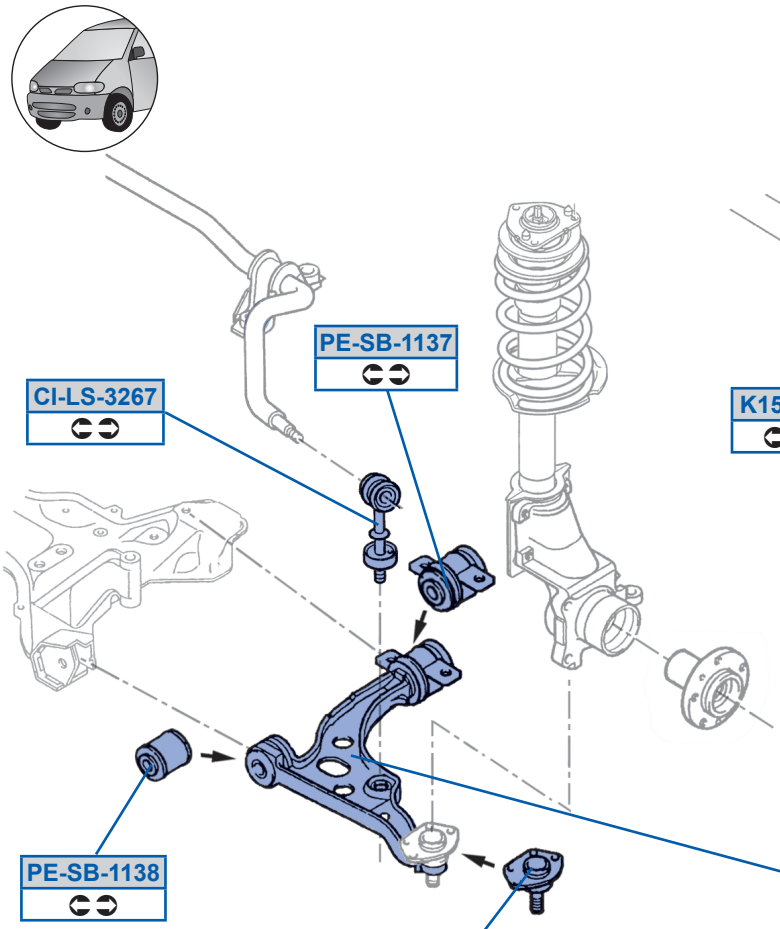

FI-AX-7528

FI-ES-7529
→04/02 Ø 14.4mm
CI-ES-2460
04/02→ Ø 17mm

K150119

PE-SB-1137

CI-LS-3267

PE-SB-1138

FI-BJ-7530	FI-BJ-0512
→04/02 ✓ 1.0T, 1.4T Ø 16mm	04/02→ ✓ 1.0T, 1.4T Ø 18mm
FI-BJ-7531	**FI-BJ-0513**
→04/02 ✓ 1.8T Ø 18mm	04/02→ ✓ 1.8T Ø 20mm

FI-WP-0109	FI-WP-0108
→04/02 ✓ 1.0T, 1.4T ✓ Ø 16mm	→04/02 ✓ 1.0T, 1.4T ✓ Ø 16mm
FI-WP-0111	**FI-WP-0110**
→04/02 ✓ 1.8T ✓ Ø 18mm	→04/02 ✓ 1.8T ✓ Ø 18mm
FI-WP-3840	**FI-WP-0118**
04/02→ ✓ 1.0T, 1.4T ✓ Ø 18mm	04/02→ ✓ 1.0T, 1.4T ✓ Ø 18mm
CI-WP-3876	**CI-WP-3877**
04/02→ ✓ 1.8T ✓ Ø 20mm	04/02→ ✓ 1.8T ✓ Ø 20mm

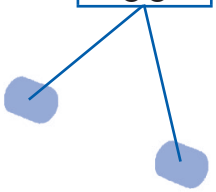

CI-SB-7966

CI-SB-7967