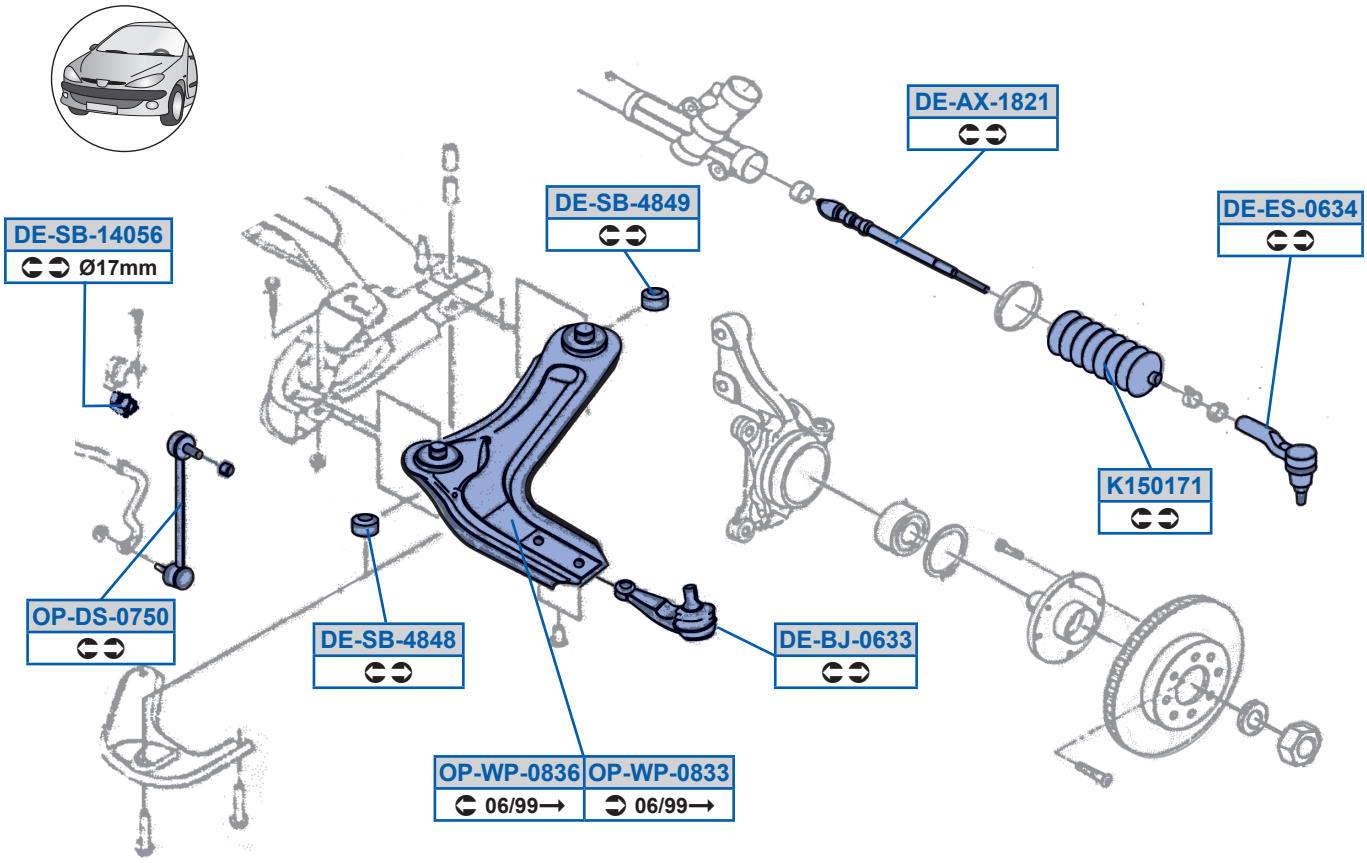
DE-AX-1821
DE-SB-4849
DE-ES-0634
DE-SB-14056
Ø17mm
K150171
OP-DS-0750
DE-SB-4848
DE-BJ-0633
OP-WP-0836
06/99→
OP-WP-0833
06/99→