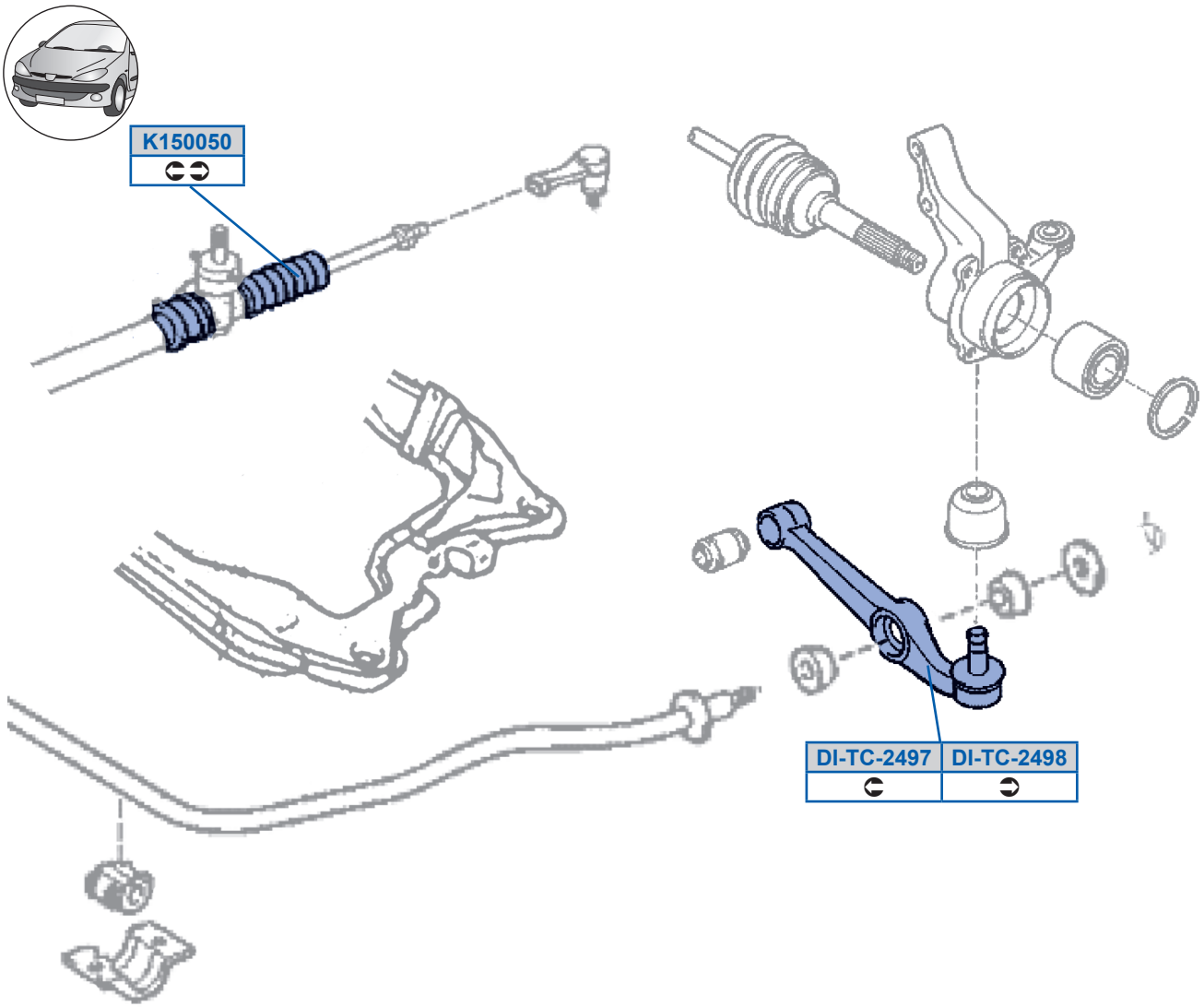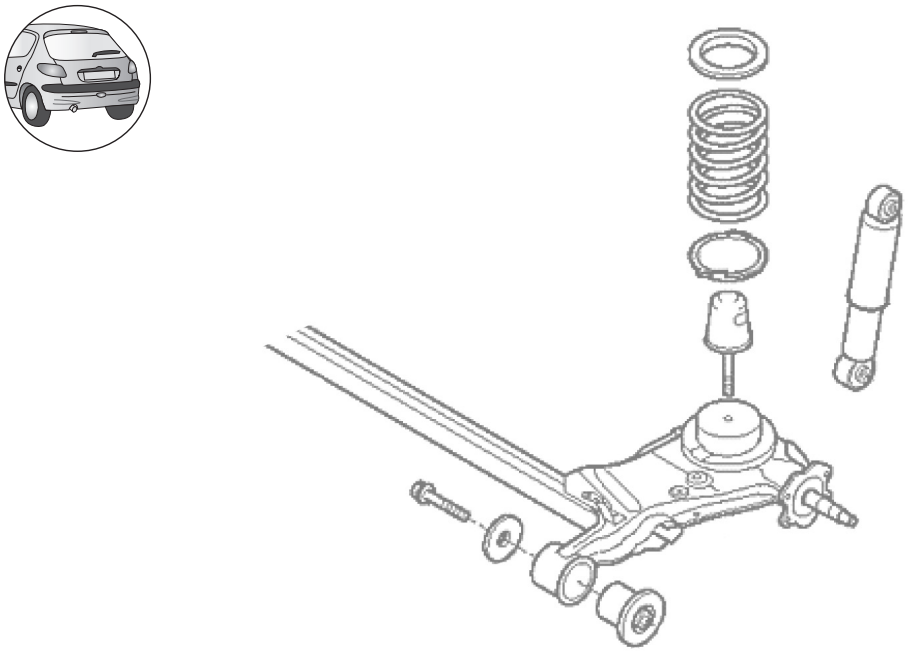
K150050
DI-TC-2497
DI-TC-2498