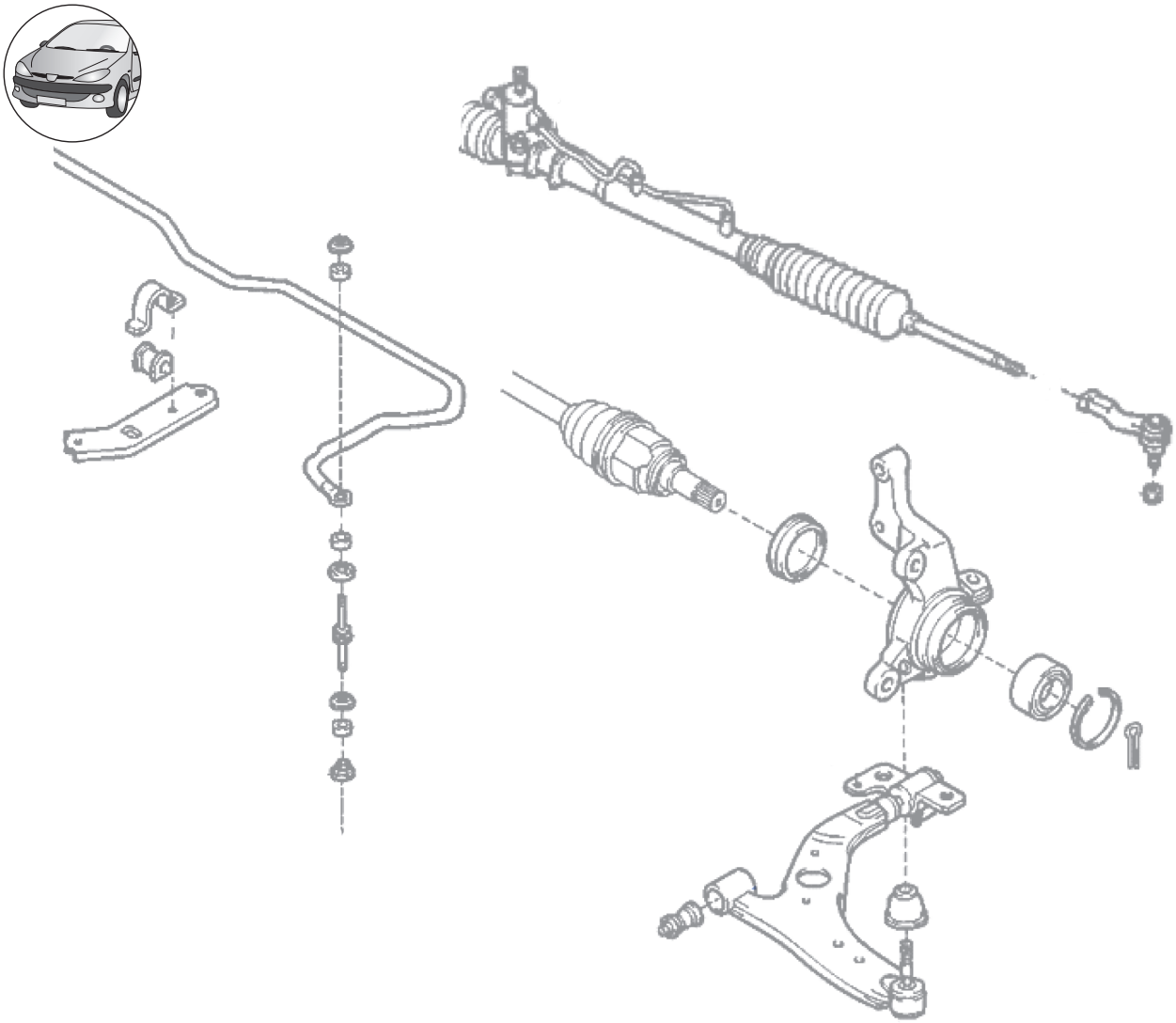

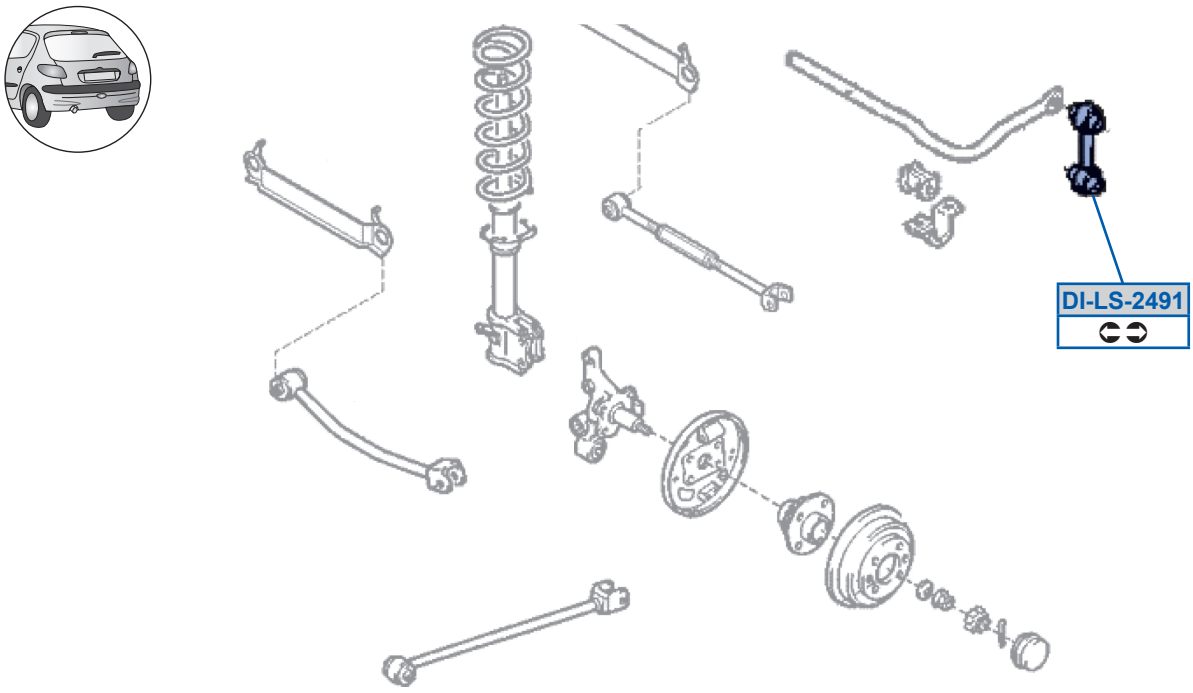
DI-LS-2491