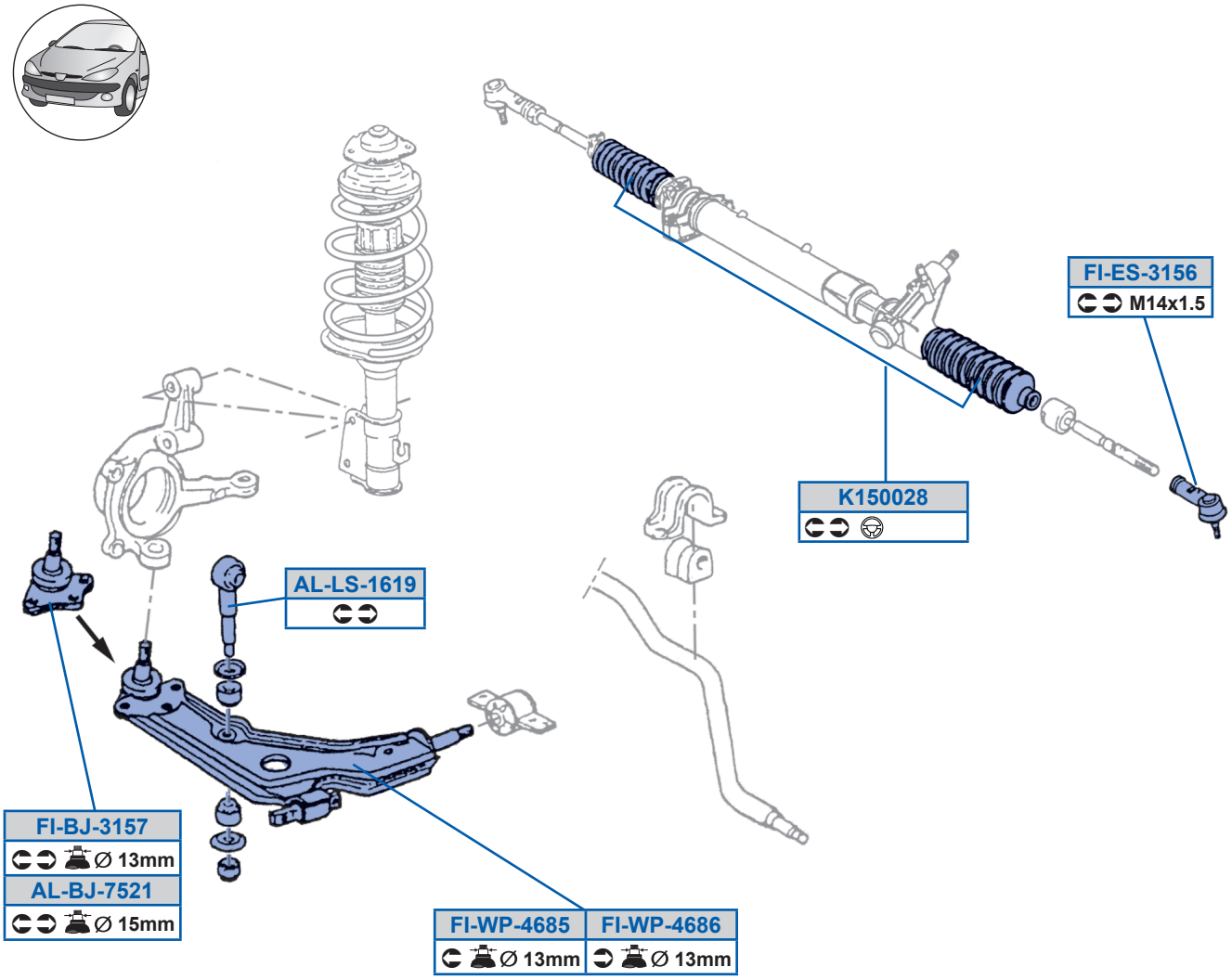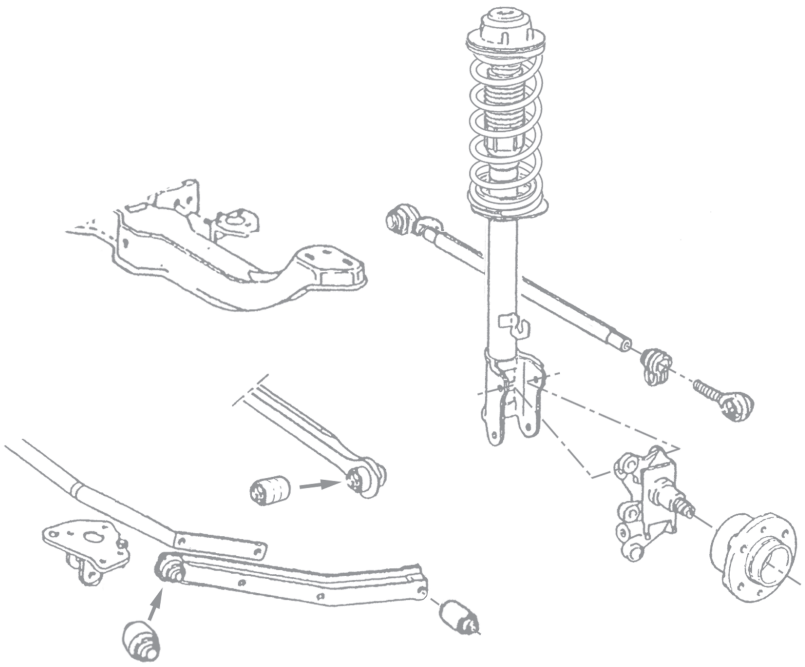
FI-ES-3156
M14x1.5
K150028
AL-LS-1619
FI-BJ-3157
Ø 13mm
AL-BJ-7521
Ø 15mm
FI-WP-4685
Ø 13mm
FI-WP-4686
Ø 13mm