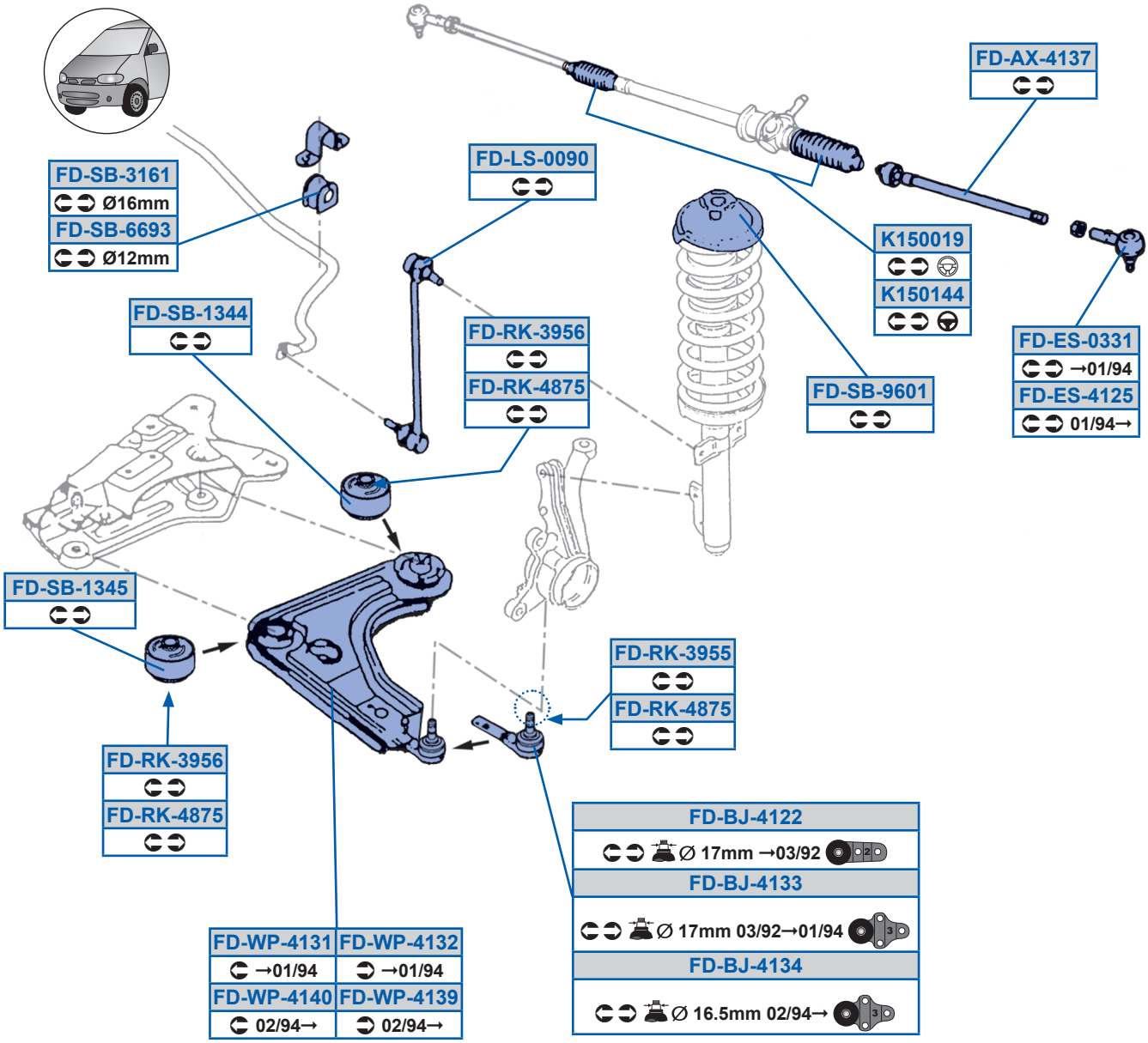
FD-AX-4137
FD-SB-3161
Ø16mm
FD-SB-6693
Ø12mm
FD-LS-0090
K150019
K150144
FD-SB-1344
FD-RK-3956
FD-RK-4875
FD-SB-9601
FD-ES-0331
→01/94
FD-ES-4125
01/94→
FD-SB-1345
FD-RK-3955
FD-RK-4875
FD-RK-3956
FD-RK-4875
FD-BJ-4122
Ø 17mm →03/92
FD-BJ-4133
Ø 17mm 03/92→01/94
FD-BJ-4134
Ø 16.5mm 02/94→
FD-WP-4131
→01/94
FD-WP-4132
→01/94
FD-WP-4140
02/94→
FD-WP-4139
02/94→

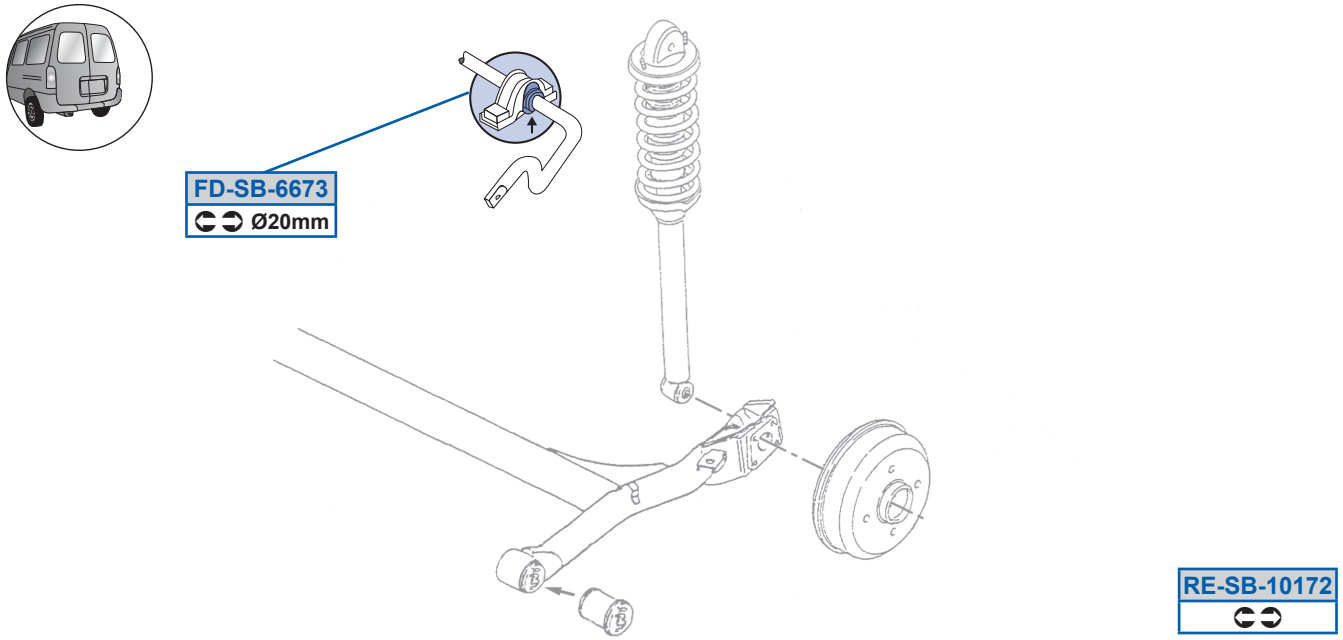
FD-SB-6673
Ø20mm
RE-SB-10172