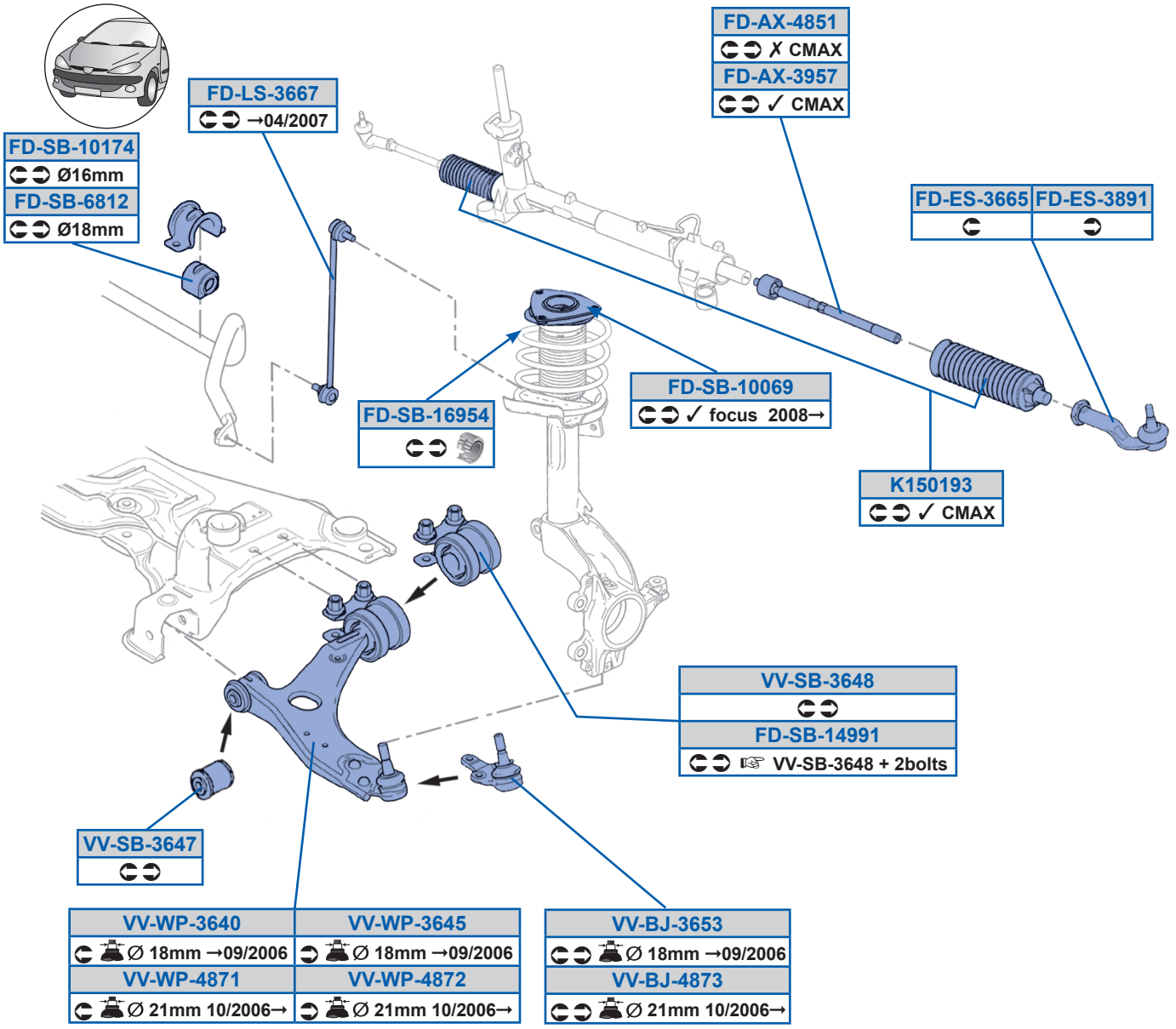
FD-SB-10174
Ø16mm
FD-SB-6812
Ø18mm
FD-LS-3667
→04/2007
FD-AX-4851
✗ CMAX
FD-AX-3957
✓ CMAX
FD-ES-3665
FD-ES-3891
FD-SB-16954
FD-SB-10069
✓ focus 2008→
K150193
✓ CMAX
VV-SB-3648
FD-SB-14991
VV-SB-3648 + 2bolts
VV-SB-3647
VV-WP-3640
Ø 18mm →09/2006
VV-WP-3645
Ø 18mm →09/2006
VV-WP-4871
Ø 21mm 10/2006→
VV-WP-4872
Ø 21mm 10/2006→
VV-BJ-3653
Ø 18mm →09/2006
VV-BJ-4873
Ø 21mm 10/2006→

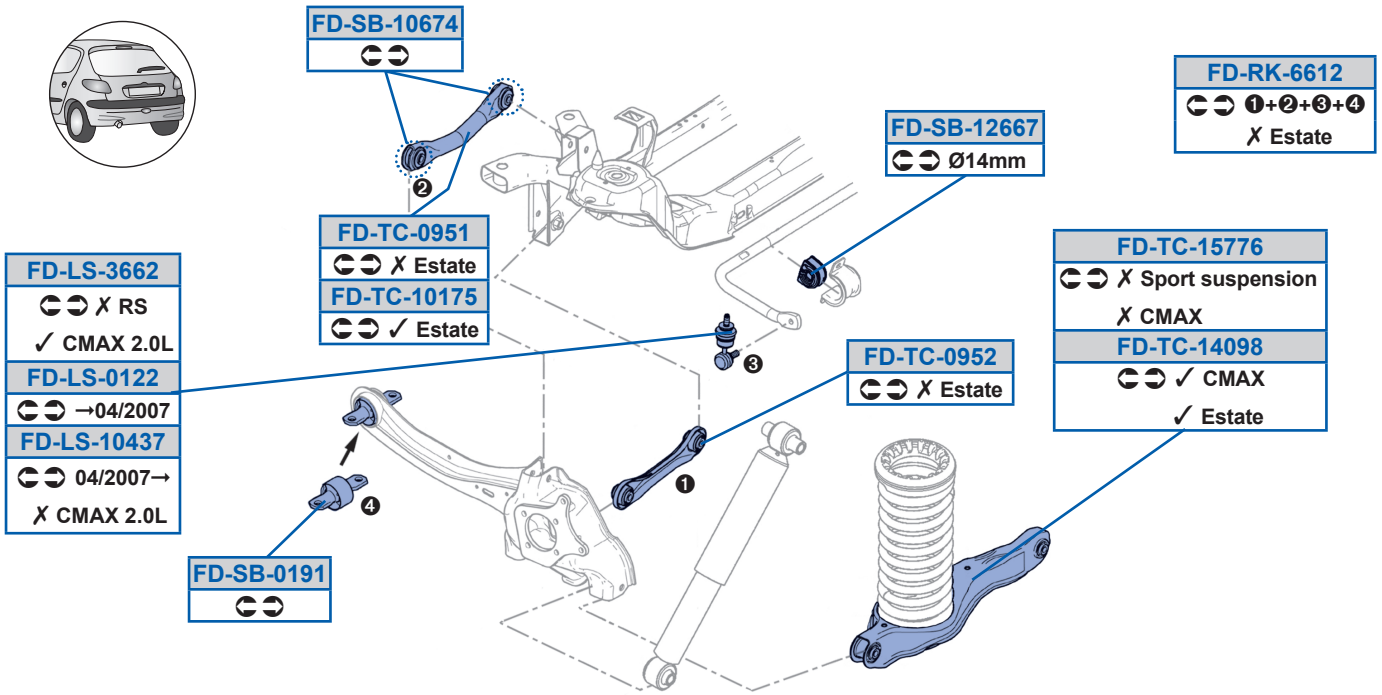
FD-SB-10674
FD-RK-6612
❶+❷+❸+❹
✗ Estate
FD-SB-12667
Ø14mm
FD-TC-0951
✗ Estate
FD-TC-10175
✓ Estate
FD-LS-3662
✗ RS
✓ CMAX 2.0L
FD-LS-0122
→04/2007
FD-LS-10437
04/2007→
✗ CMAX 2.0L
FD-TC-15776
✗ Sport suspension
✗ CMAX
FD-TC-14098
✓ CMAX
✓ Estate
FD-TC-0952
✗ Estate
FD-SB-0191