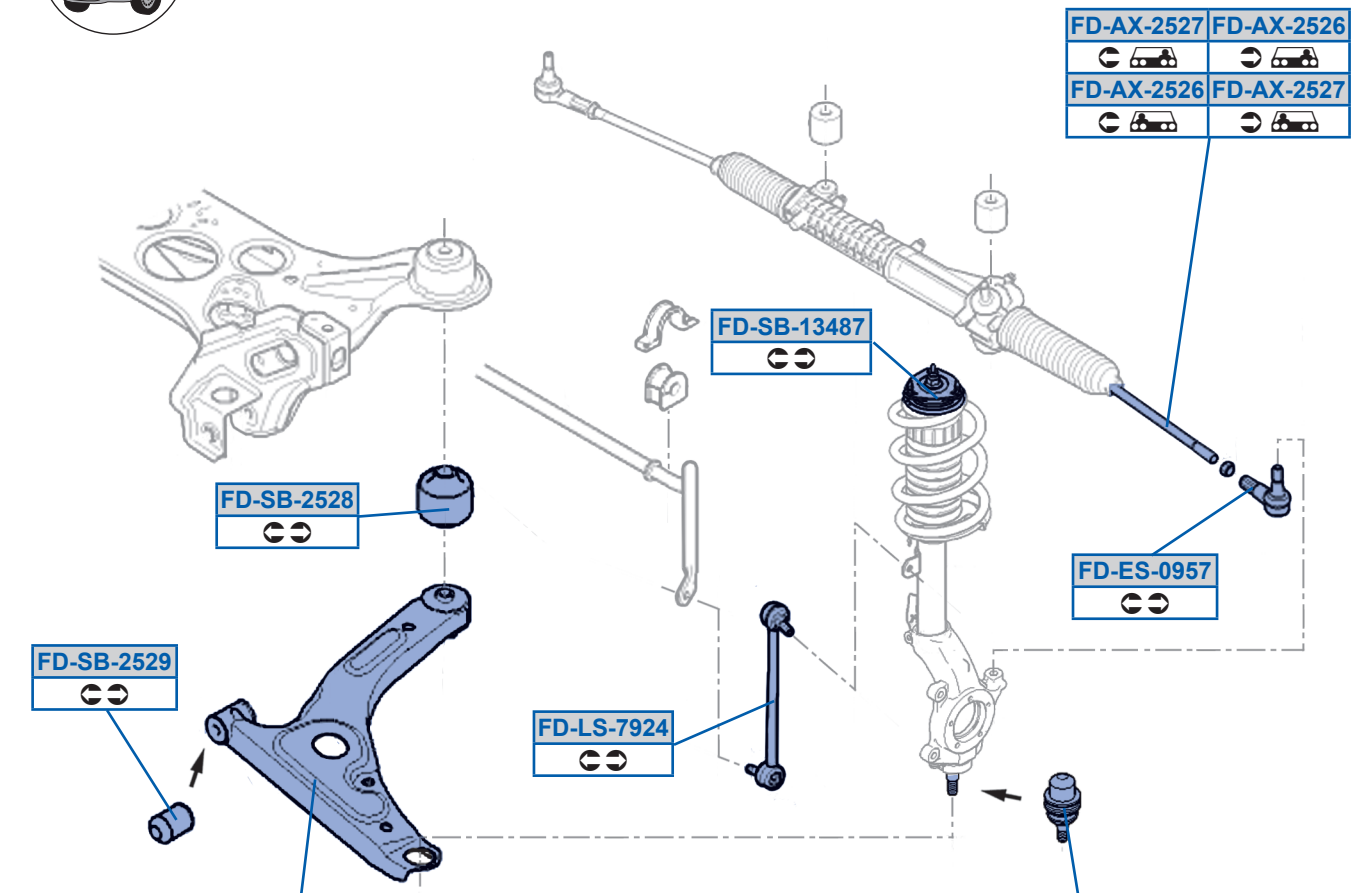
FD-AX-2527
FD-AX-2526
FD-AX-2526
FD-AX-2527
FD-SB-13487
FD-SB-2528
FD-ES-0957
FD-SB-2529
FD-LS-7924
FD-WP-15249
Heavy duty chassis
compatible with FB-BJ-8945
FD-WP-15250
Heavy duty chassis
compatible with FB-BJ-8945
FD-WP-2524
Standard chassis
compatible with FB-BJ-0814
FD-WP-2525
Standard chassis
compatible with FB-BJ-0814
FD-BJ-0814
Standard chassis
FD-BJ-8945
Heavy duty chassis

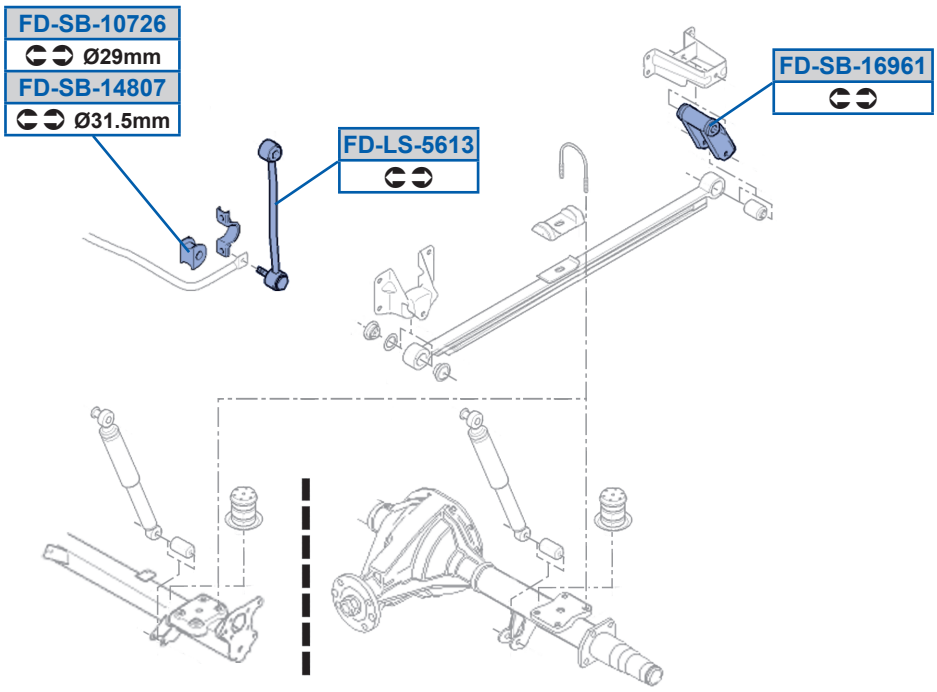
FD-SB-10726
Ø29mm
FD-SB-14807
Ø31.5mm
FD-LS-5613
FD-SB-16961