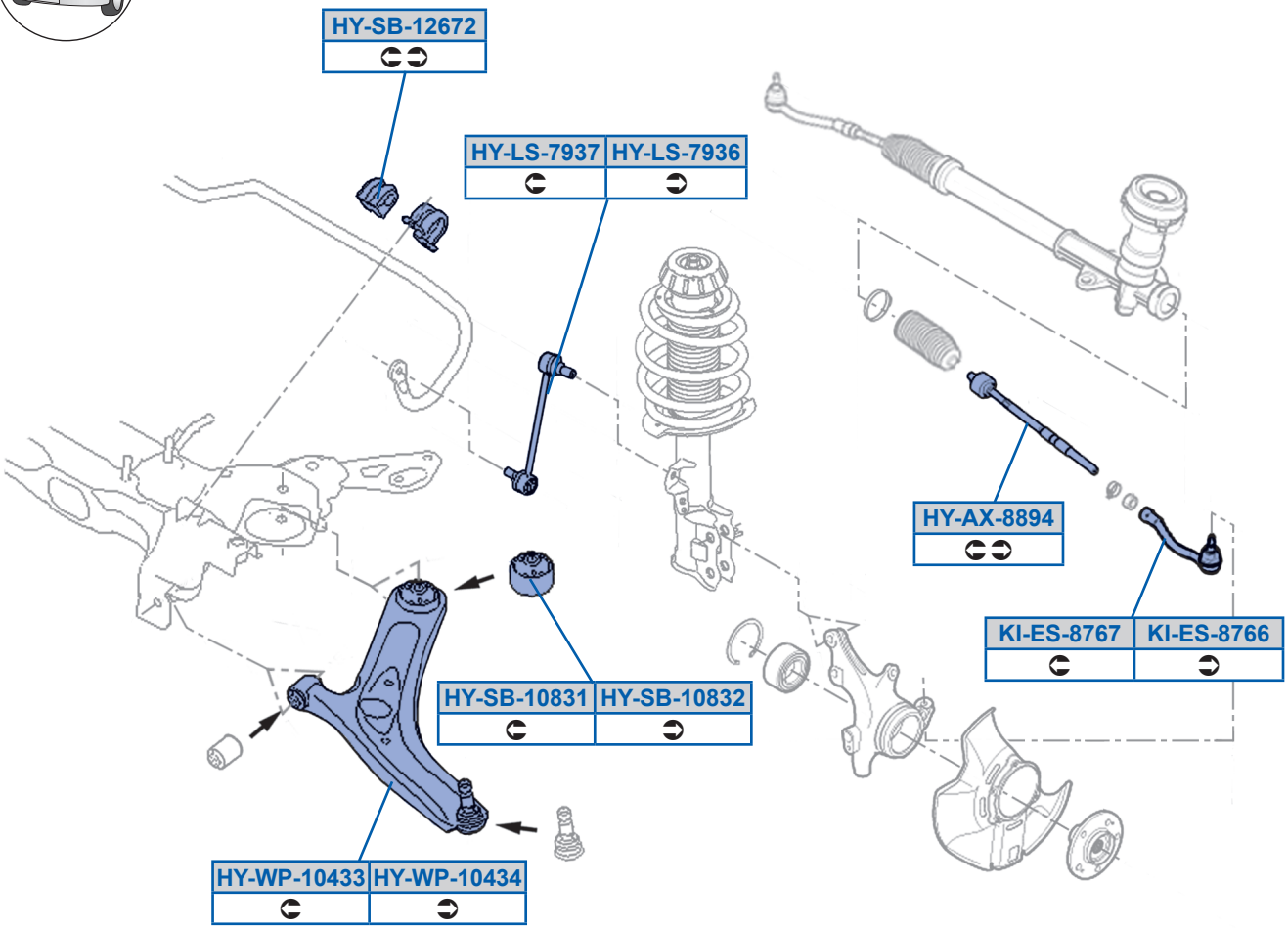
HY-SB-12672
HY-LS-7937
HY-LS-7936
HY-AX-8894
KI-ES-8767
KI-ES-8766
HY-SB-10831
HY-SB-10832
HY-WP-10433
HY-WP-10434

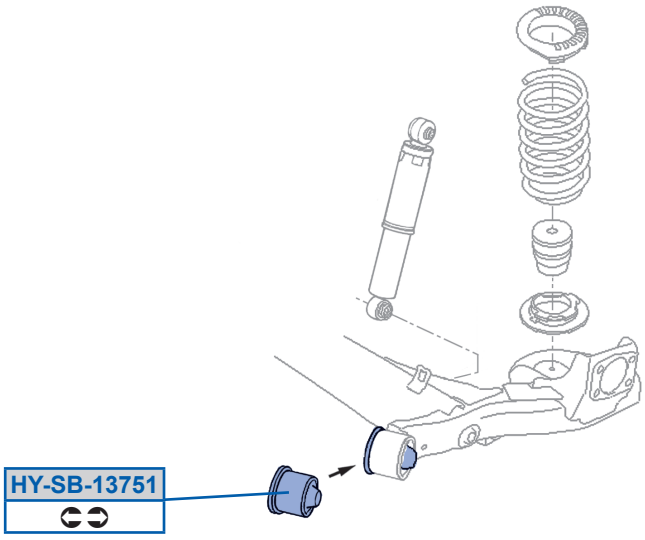
HY-SB-13751