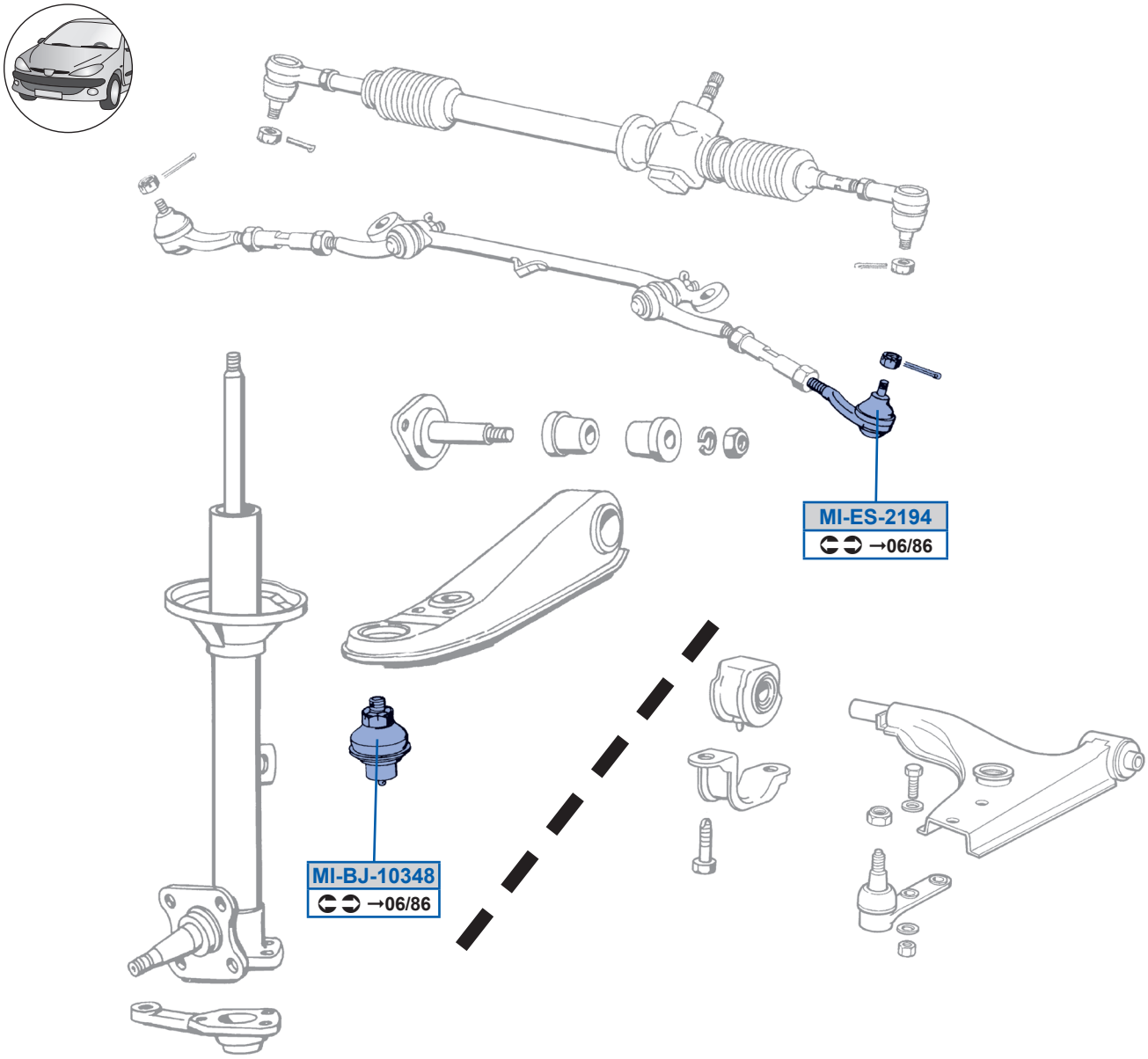
MI-ES-2194
→06/86
MI-BJ-10348
→06/86