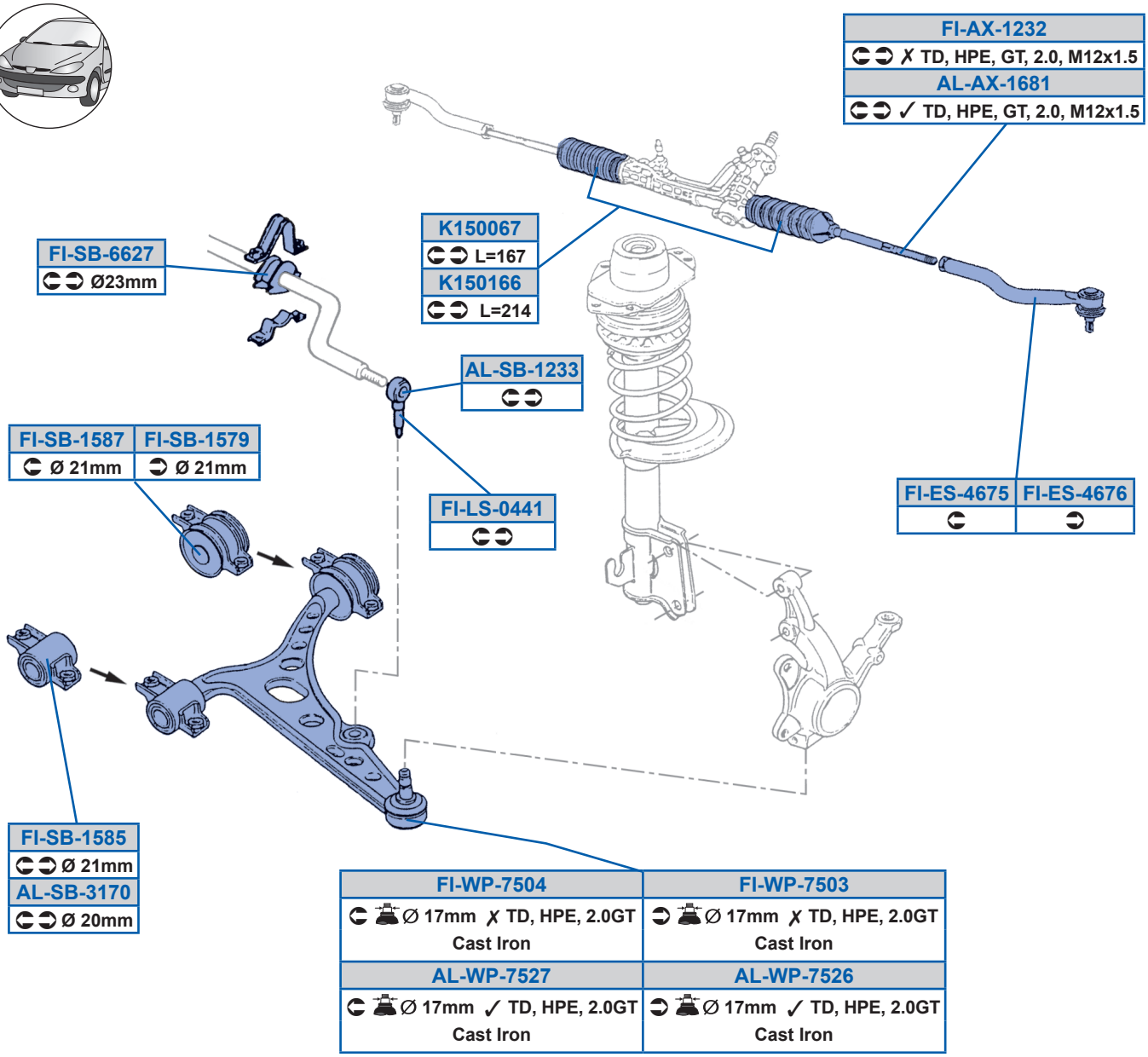
FI-AX-1232
✗ TD, HPE, GT, 2.0, M12x1.5
AL-AX-1681
✓ TD, HPE, GT, 2.0, M12x1.5
K150067
L=167
K150166
L=214
FI-SB-6627
Ø23mm
AL-SB-1233
FI-SB-1587
Ø 21mm
FI-SB-1579
Ø 21mm
FI-LS-0441
FI-ES-4675
FI-ES-4676
FI-SB-1585
Ø 21mm
AL-SB-3170
Ø 20mm
FI-WP-7504
Ø 17mm ✗ TD, HPE, 2.0GT
Cast Iron
FI-WP-7503
Ø 17mm ✗ TD, HPE, 2.0GT
Cast Iron
AL-WP-7527
Ø 17mm ✓ TD, HPE, 2.0GT
Cast Iron
AL-WP-7526
Ø 17mm ✓ TD, HPE, 2.0GT
Cast Iron

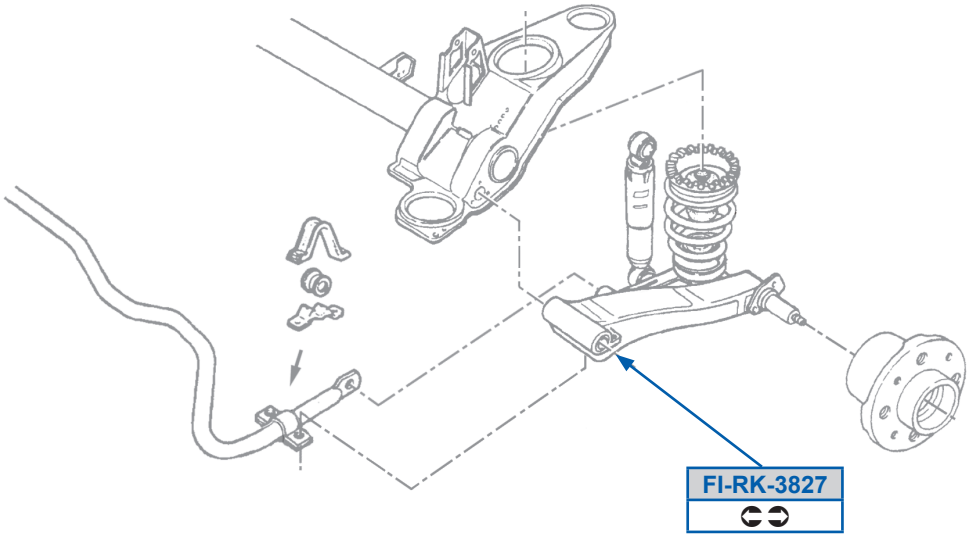
FI-RK-3827