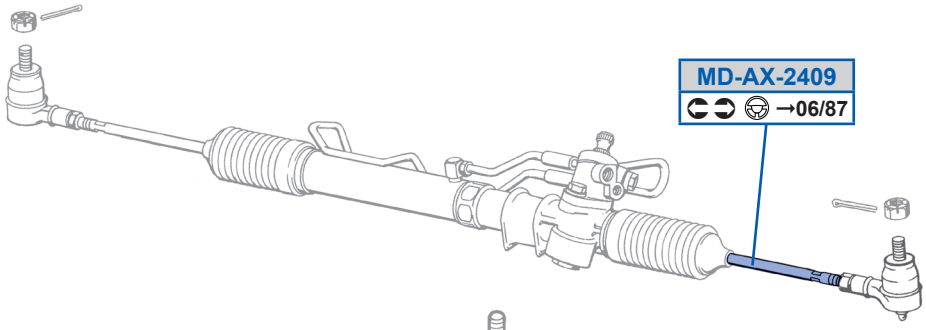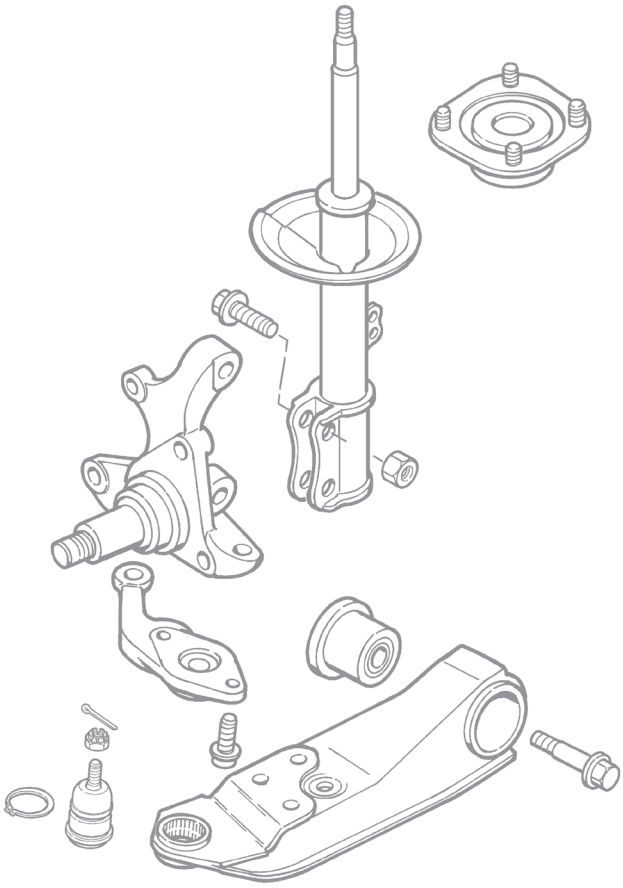
MD-AX-2409
→06/87