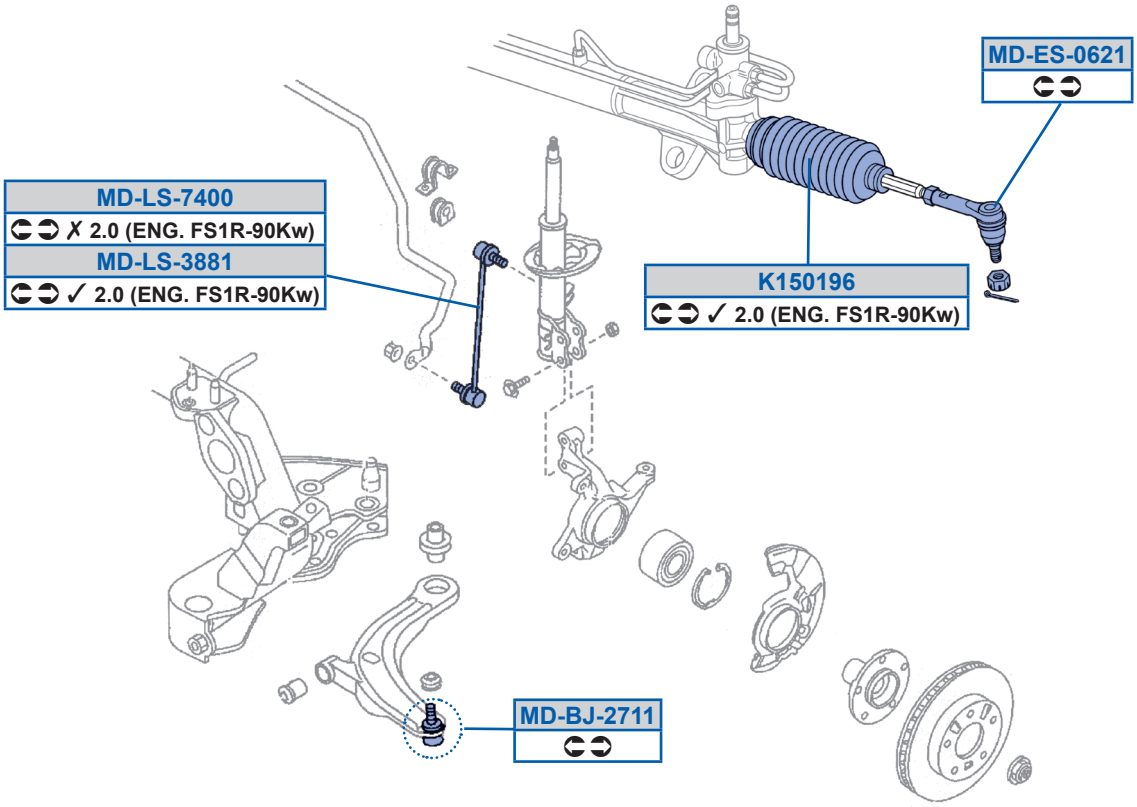
MD-ES-0621
MD-LS-7400
✗ 2.0 (ENG. FS1R-90Kw)
MD-LS-3881
✓ 2.0 (ENG. FS1R-90Kw)
K150196
✓ 2.0 (ENG. FS1R-90Kw)
MD-BJ-2711