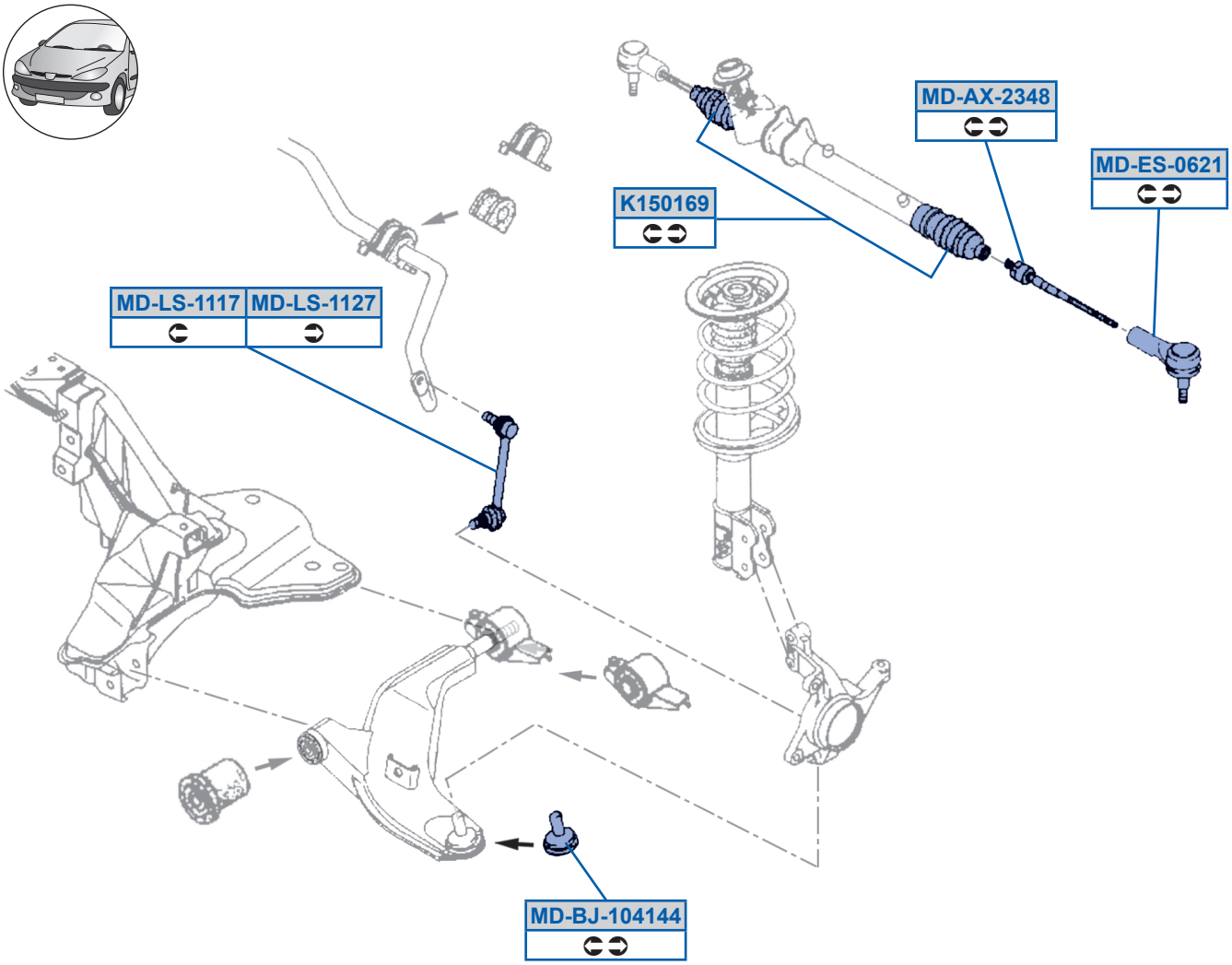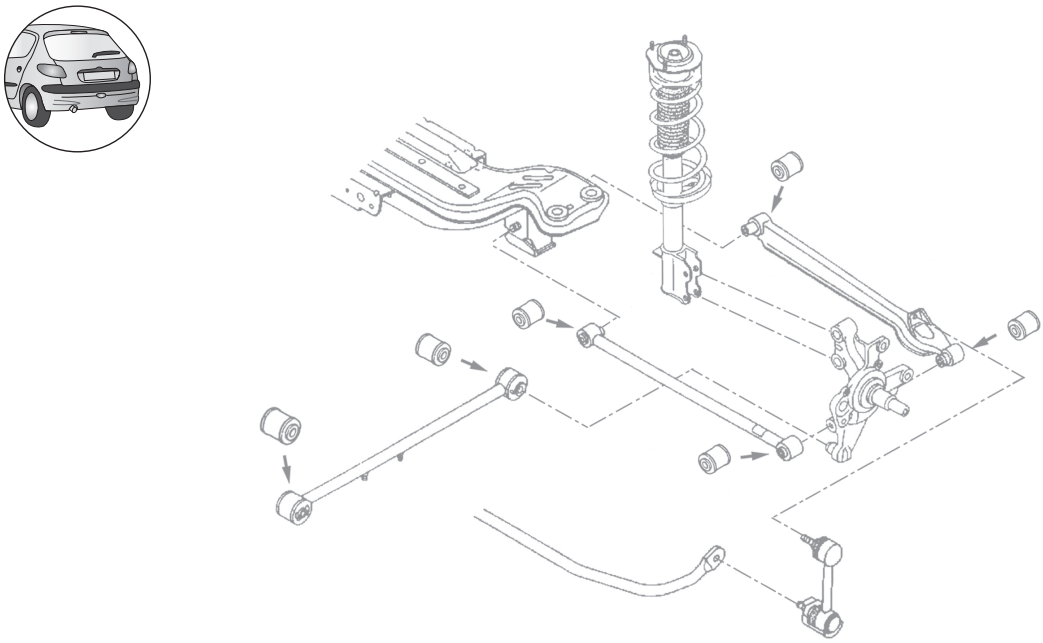
MD-AX-2348
MD-ES-0621
K150169
MD-LS-1117
MD-LS-1127
MD-BJ-104144