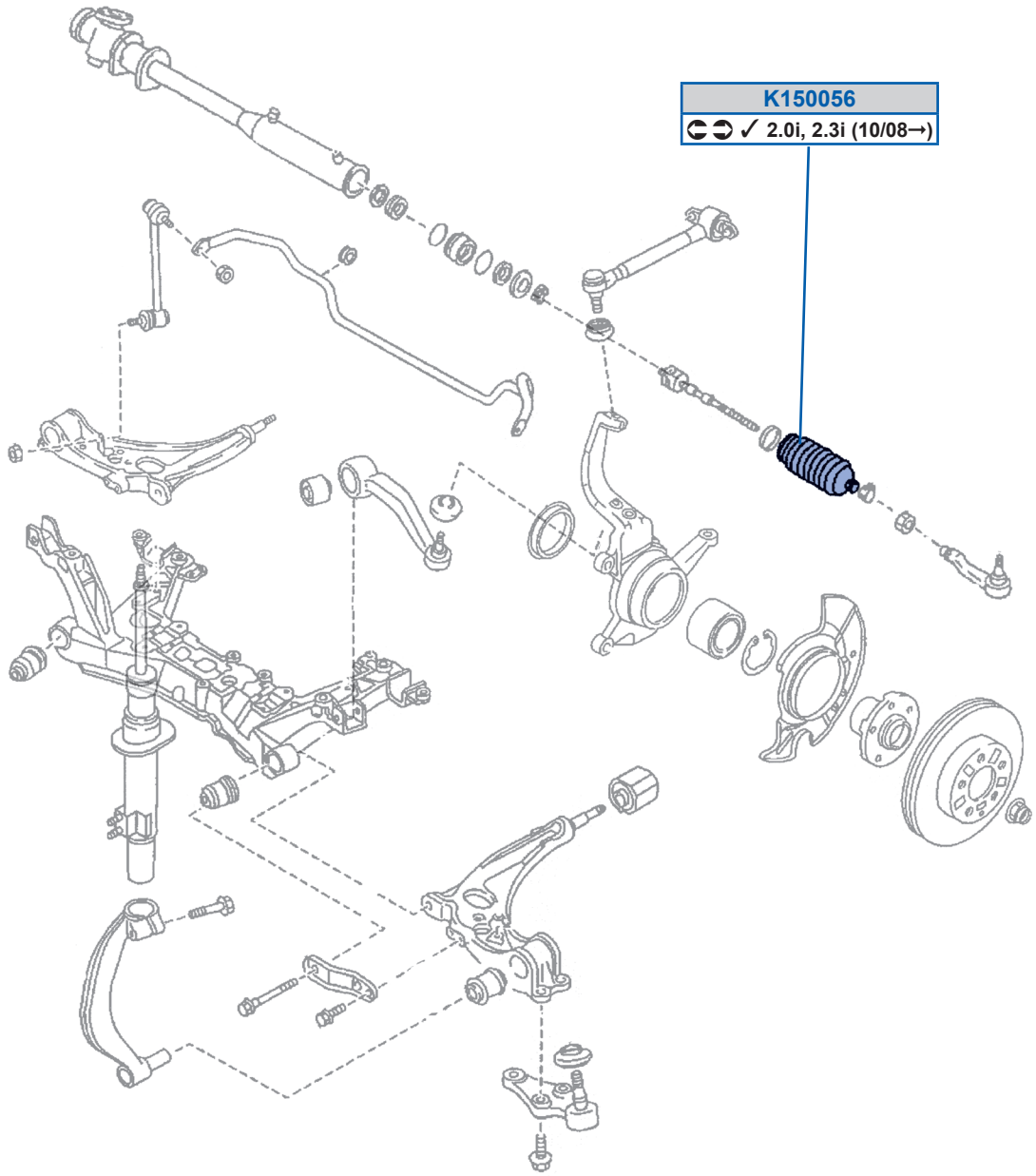
K150056
✓ 2.0i, 2.3i (10/08→)