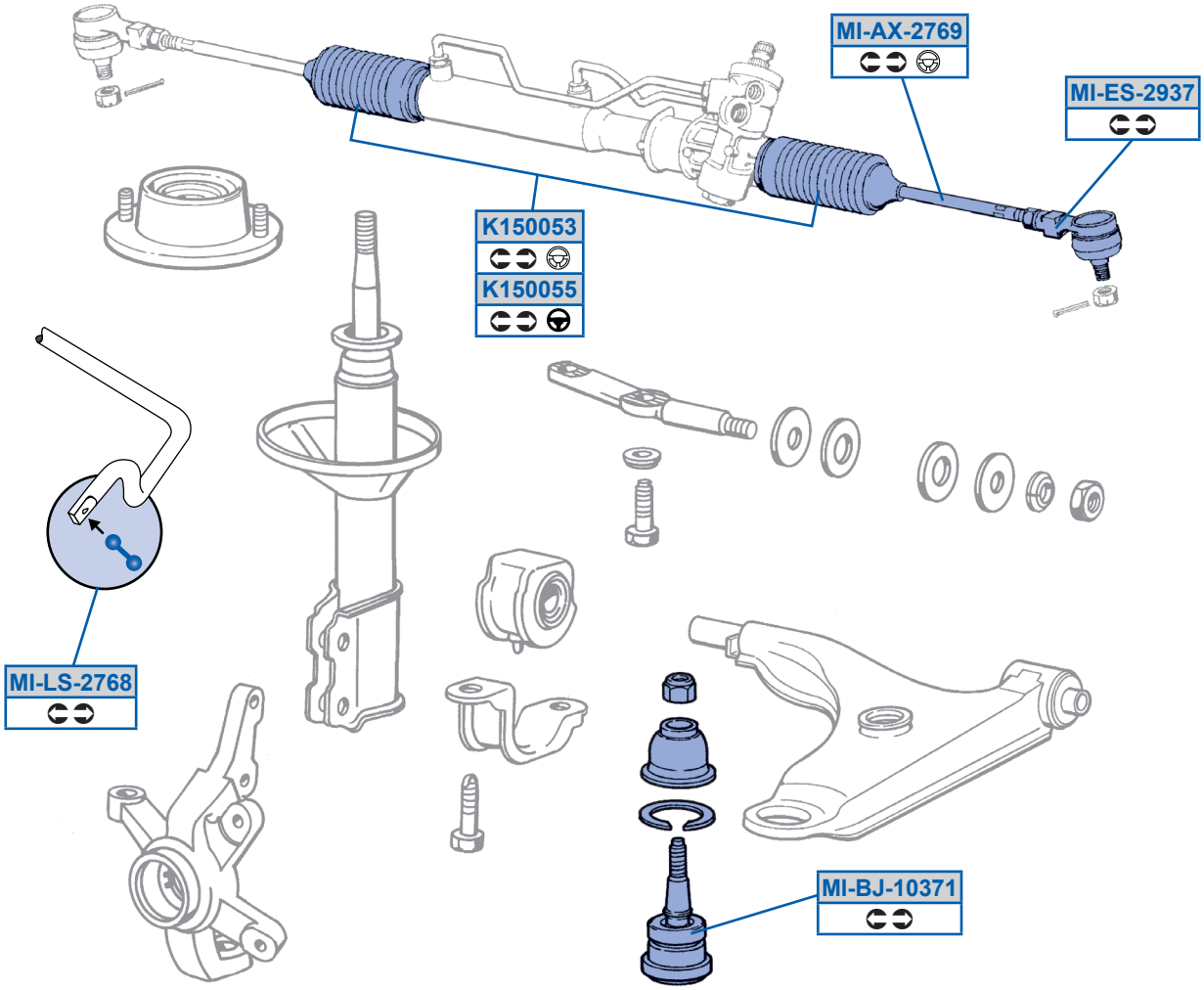
MI-AX-2769
MI-ES-2937
K150053
K150055
MI-LS-2768
MI-BJ-10371