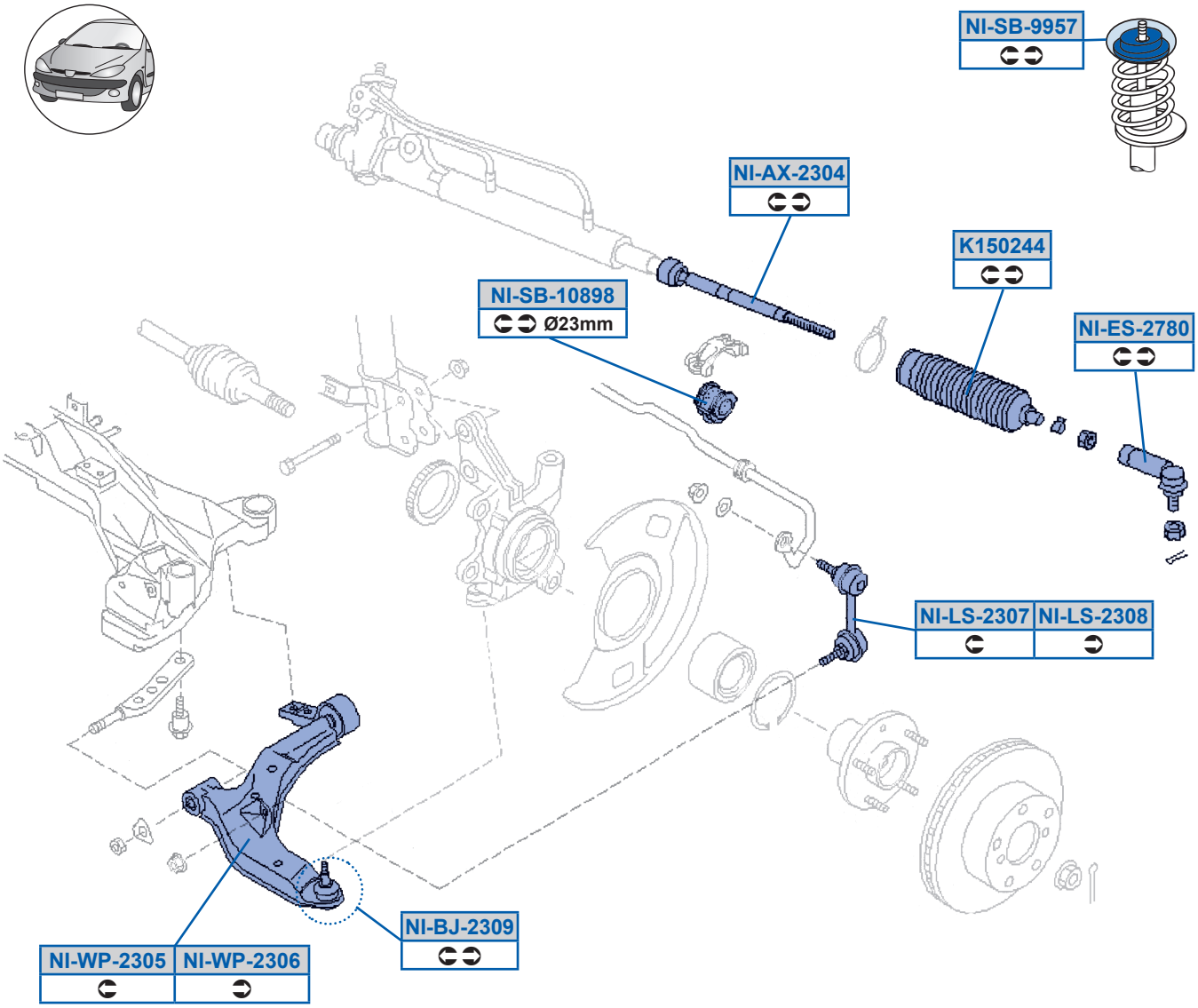
NI-SB-9957
NI-AX-2304
K150244
NI-SB-10898
Ø23mm
NI-ES-2780
NI-LS-2307
NI-LS-2308
NI-BJ-2309
NI-WP-2305
NI-WP-2306