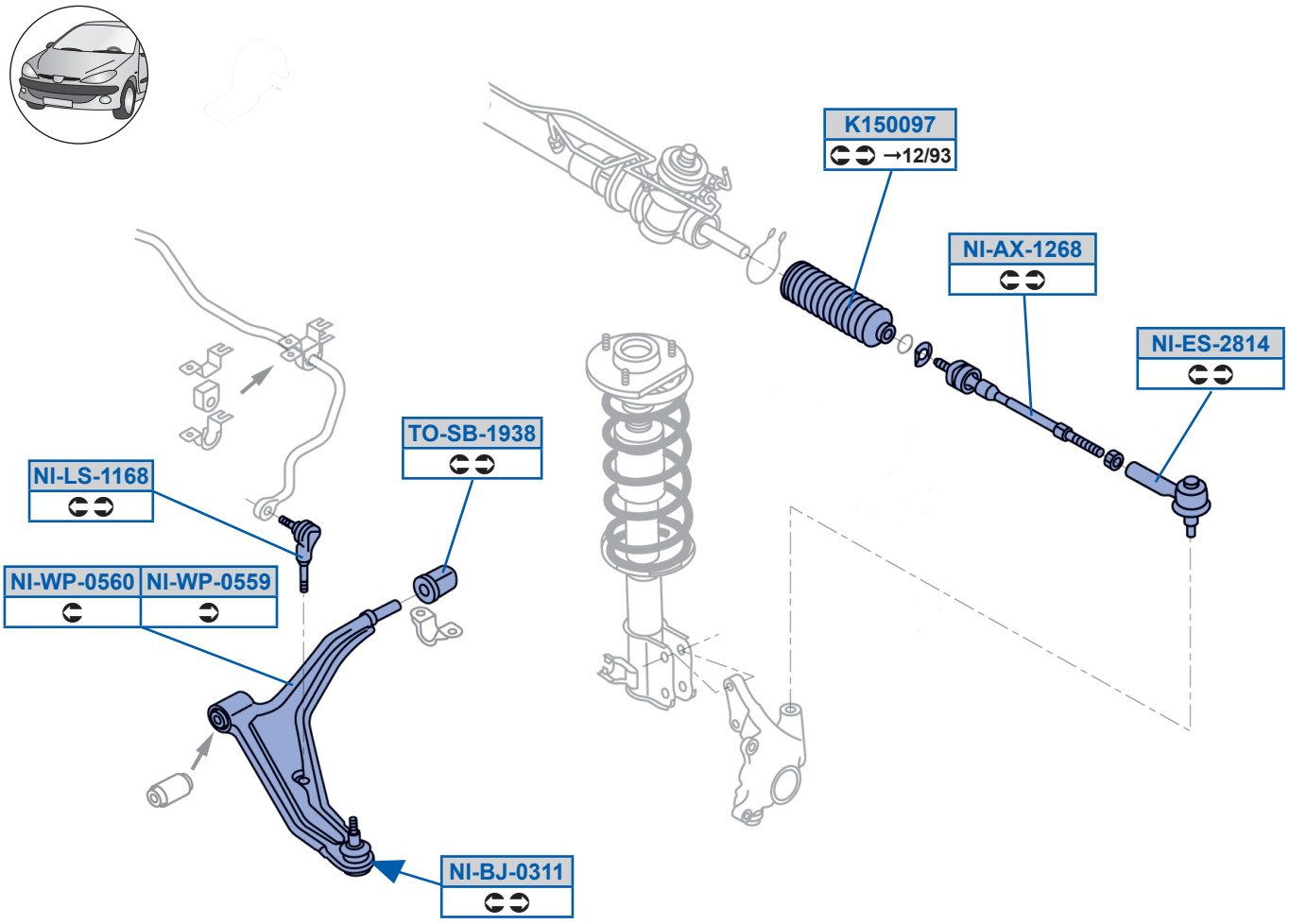
K150097
→12/93
NI-AX-1268
NI-ES-2814
TO-SB-1938
NI-LS-1168
NI-WP-0560
NI-WP-0559
NI-BJ-0311