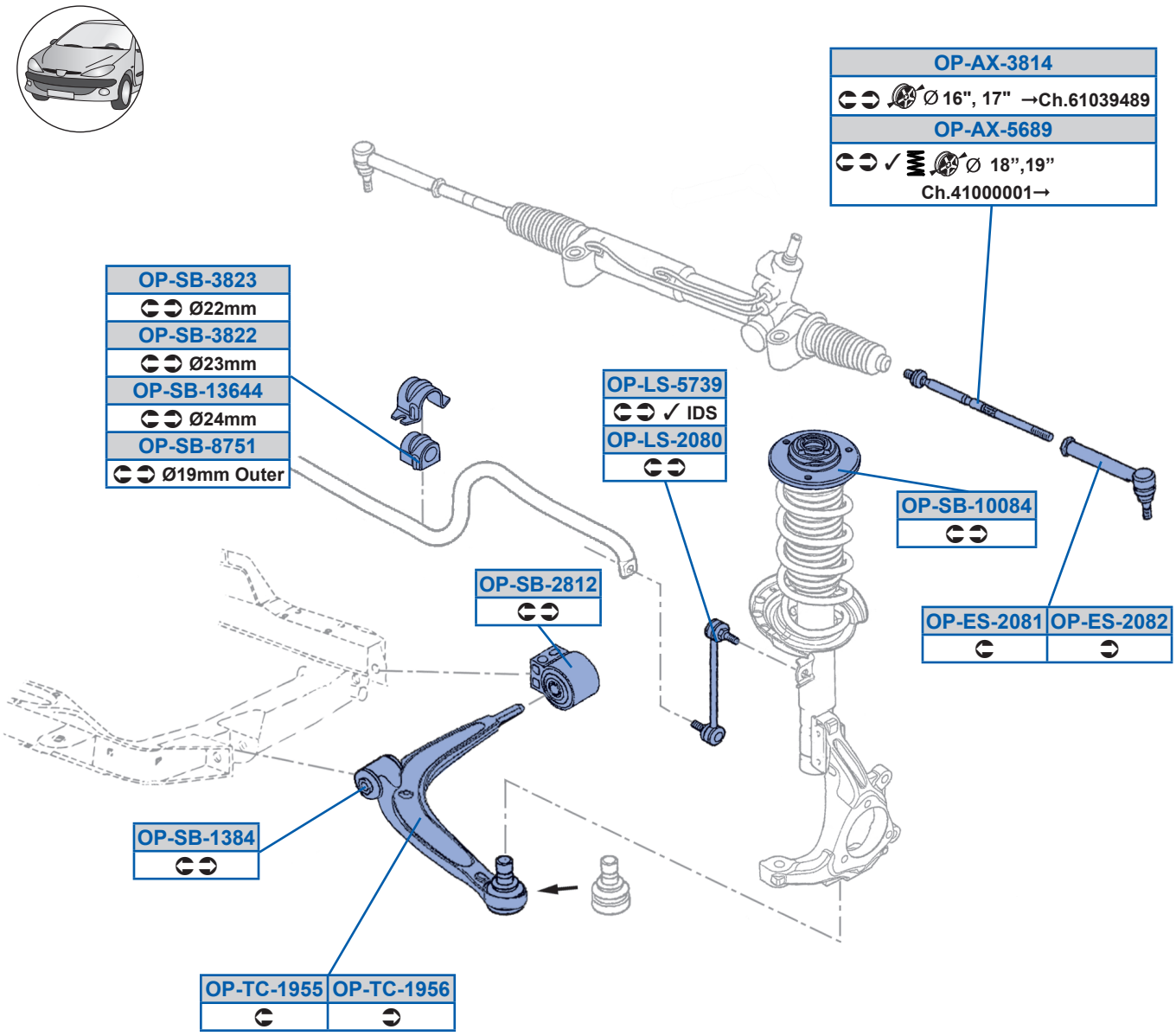
OP-AX-3814
Ø 16", 17" →Ch.61039489
OP-AX-5689
✓ Ø 18",19"
Ch.41000001→
OP-SB-3823
Ø22mm
OP-SB-3822
Ø23mm
OP-SB-13644
Ø24mm
OP-SB-8751
Ø19mm Outer
OP-LS-5739
✓ IDS
OP-LS-2080
OP-SB-10084
OP-SB-2812
OP-ES-2081
OP-ES-2082
OP-SB-1384
OP-TC-1955
OP-TC-1956

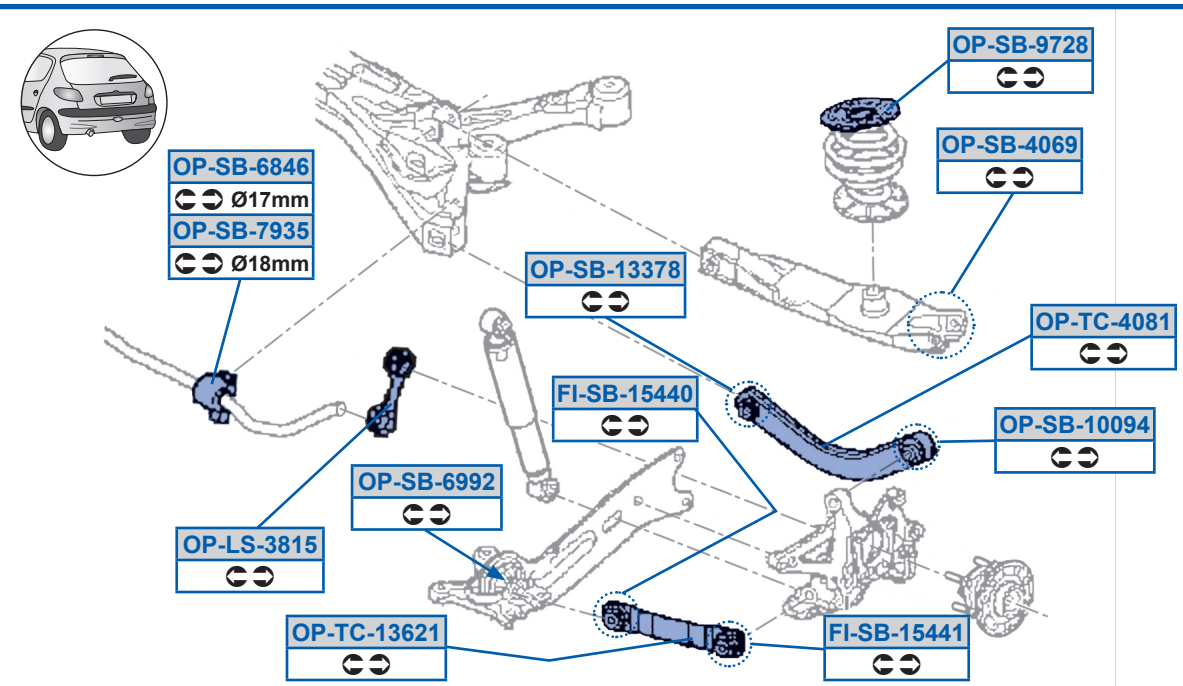
OP-SB-9728
OP-SB-4069
OP-SB-6846
Ø17mm
OP-SB-7935
Ø18mm
OP-SB-13378
OP-TC-4081
FI-SB-15440
OP-SB-10094
OP-SB-6992
OP-LS-3815
OP-TC-13621
FI-SB-15441