PE-RK-1997
Ø 23mm Blue
PE-RK-1998
Ø 20mm White
PE-RK-1999
Ø 22mm Green

K150005
K150009

PE-AX-5749

PE-ES-5703

PE-SB-6649
Ø 22mm
PE-SB-6650
Ø 23mm

PE-DS-5707
✓ GTi, Rallye, TD

PE-DS-6294

PE-SB-1321
✓ GTi, Rallye, TD

GTI

CI-SB-1262
✓ GTi, Rallye, TD

PE-TC-5034	PE-TC-5033
✓ GTi, Rallye, TD	✓ GTi, Rallye, TD

PE-SB-1314
✗ GTi, Rallye, TD

PE-SB-1315
✗ GTi, Rallye, TD

PE-TC-3198	PE-TC-3199
✗ GTi, Rallye, TD	✗ GTi, Rallye, TD

PE-SB-4528
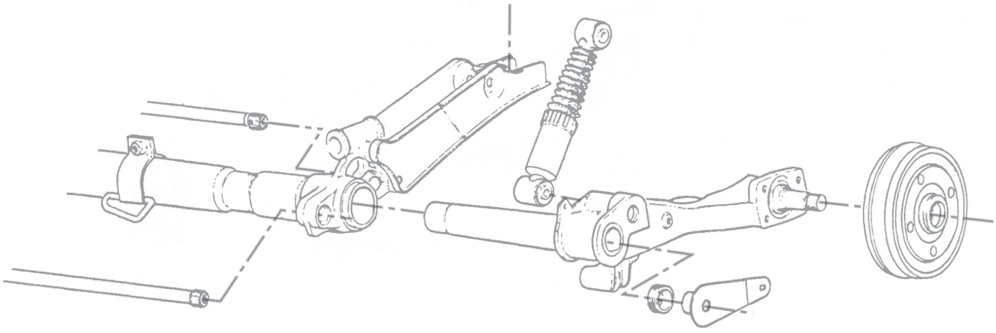
PE-SB-7417