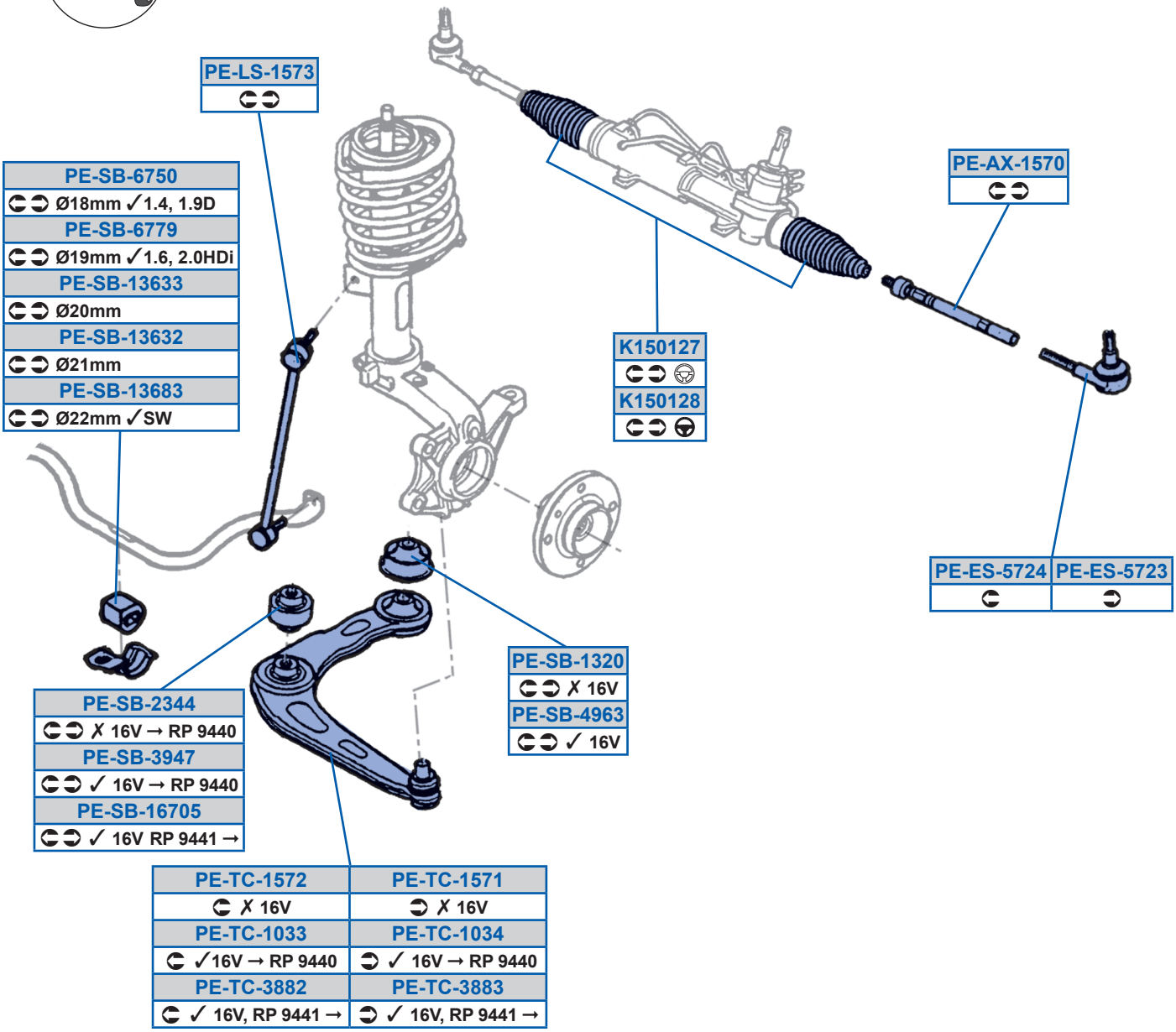
PE-LS-1573
PE-SB-6750
Ø18mm ✓1.4, 1.9D
PE-SB-6779
Ø19mm ✓1.6, 2.0HDi
PE-SB-13633
Ø20mm
PE-SB-13632
Ø21mm
PE-SB-13683
Ø22mm ✓SW
PE-AX-1570
K150127
K150128
PE-ES-5724
PE-ES-5723
PE-SB-1320
✗ 16V
PE-SB-4963
✓ 16V
PE-SB-2344
✗ 16V → RP 9440
PE-SB-3947
✓ 16V → RP 9440
PE-SB-16705
✓ 16V RP 9441 →
PE-TC-1572
✗ 16V
PE-TC-1571
✗ 16V
PE-TC-1033
✓16V → RP 9440
PE-TC-1034
✓ 16V → RP 9440
PE-TC-3882
✓ 16V, RP 9441 →
PE-TC-3883
✓ 16V, RP 9441 →

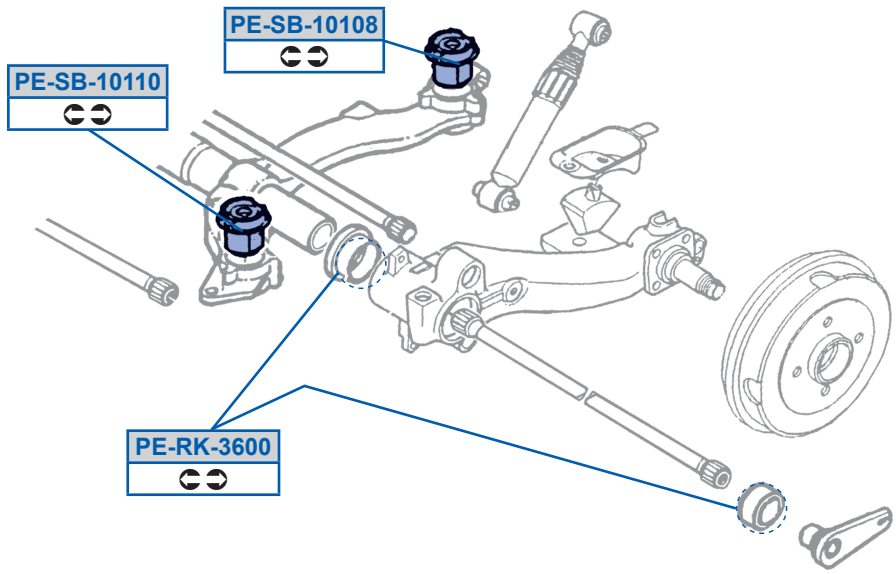
PE-SB-10108
PE-SB-10110
PE-RK-3600