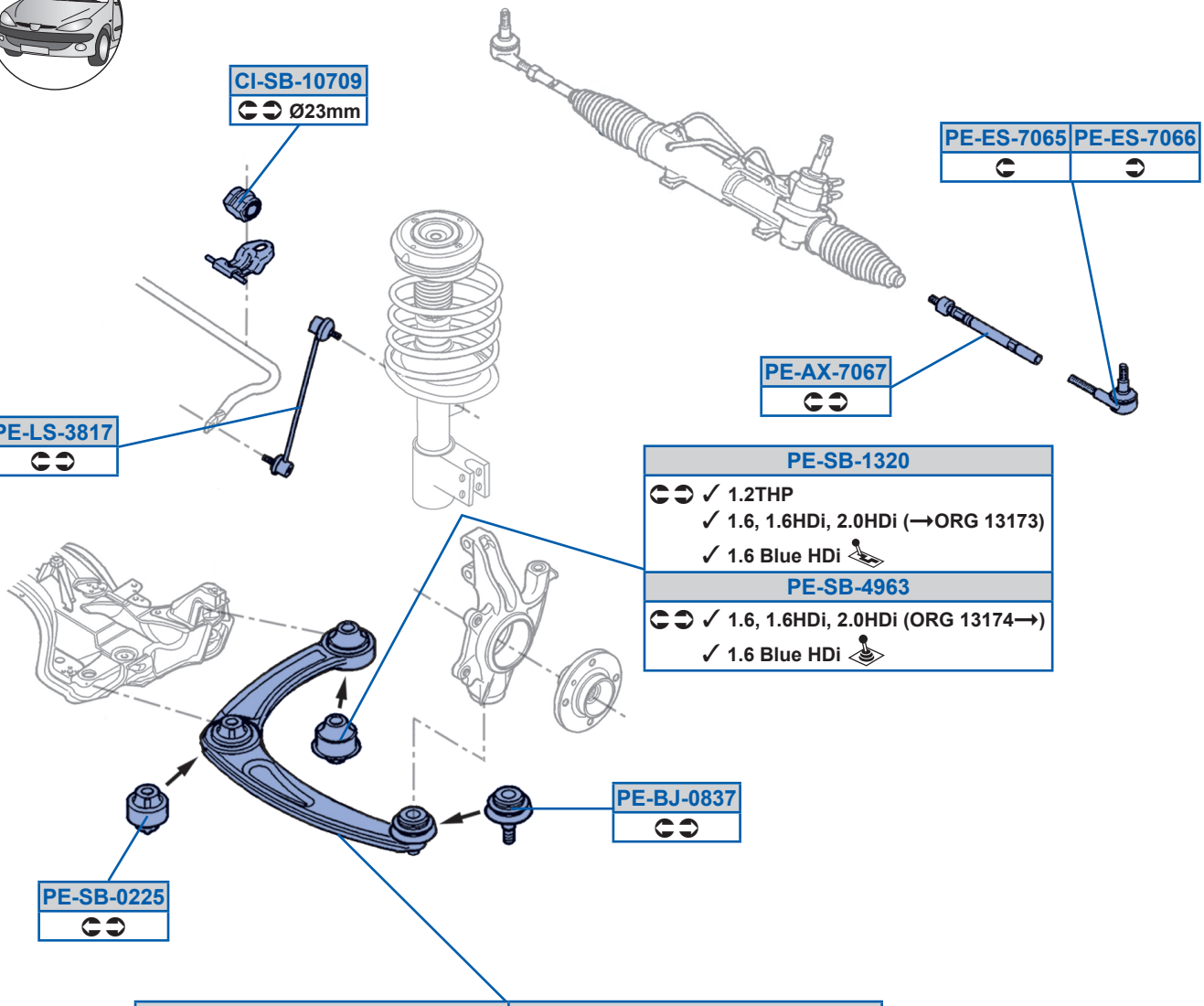
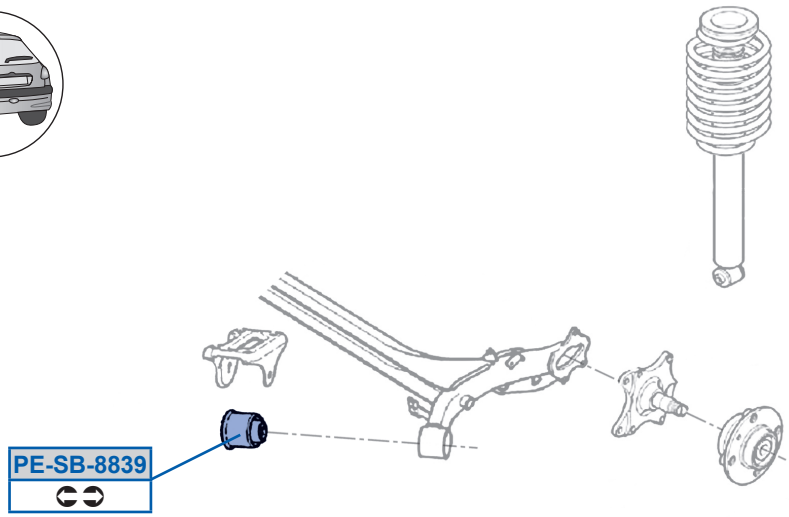
PE-TC-7382	PE-TC-7381
✓ 1.2THP ✓ 1.6, 1.6HDi, 2.0HDi (→ORG 13173) ✓ 1.6 Blue HDi	✓ 1.2THP ✓ 1.6, 1.6HDi, 2.0HDi (→ORG 13173) ✓ 1.6 Blue HDi
CI-TC-14827	**CI-TC-14828**
✓ 1.6, 1.6HDi, 2.0HDi (ORG 13174→) ✓ 1.6 Blue HDi	✓ 1.6, 1.6HDi, 2.0HDi (ORG 13174→) ✓ 1.6 Blue HDi