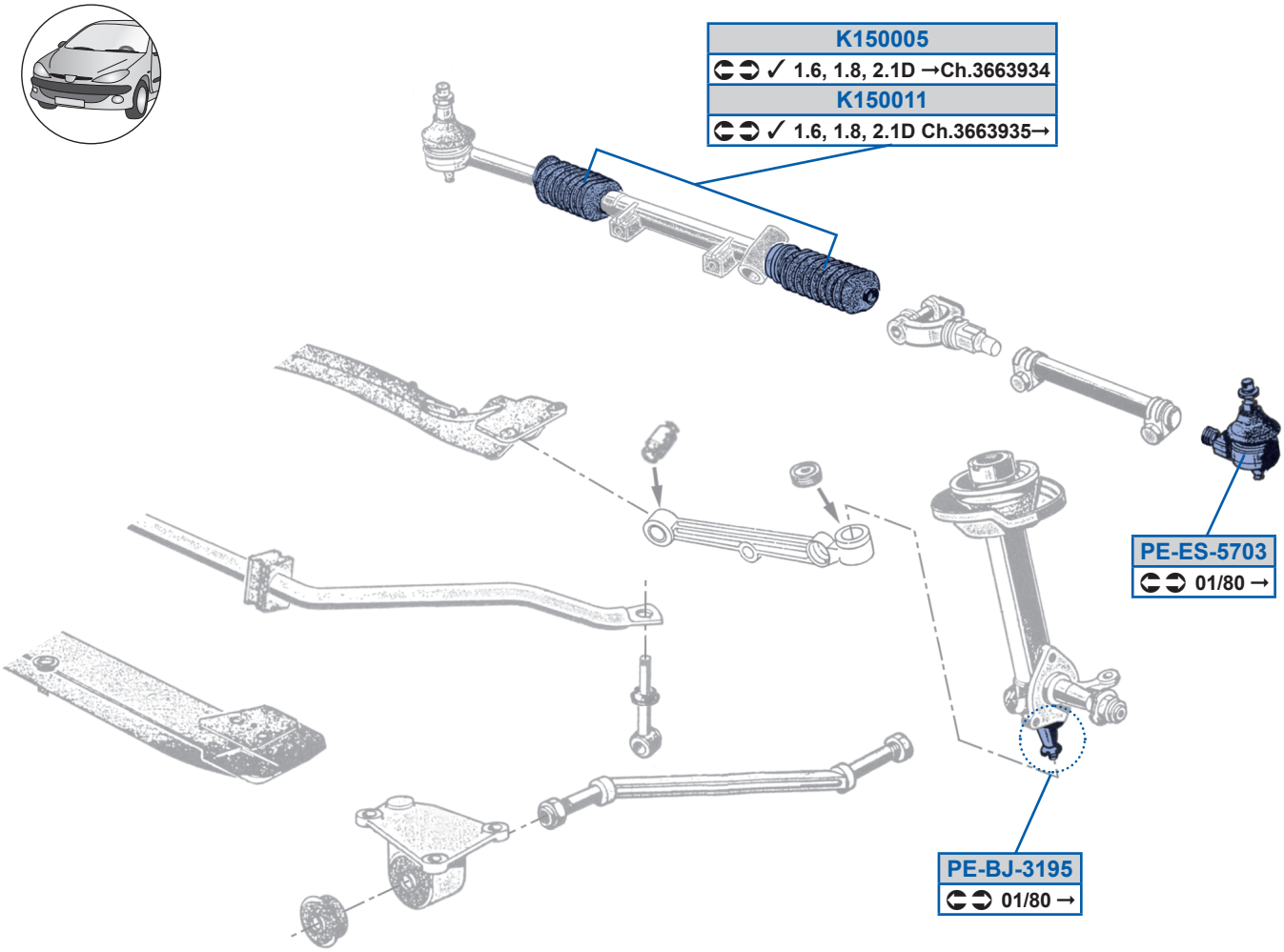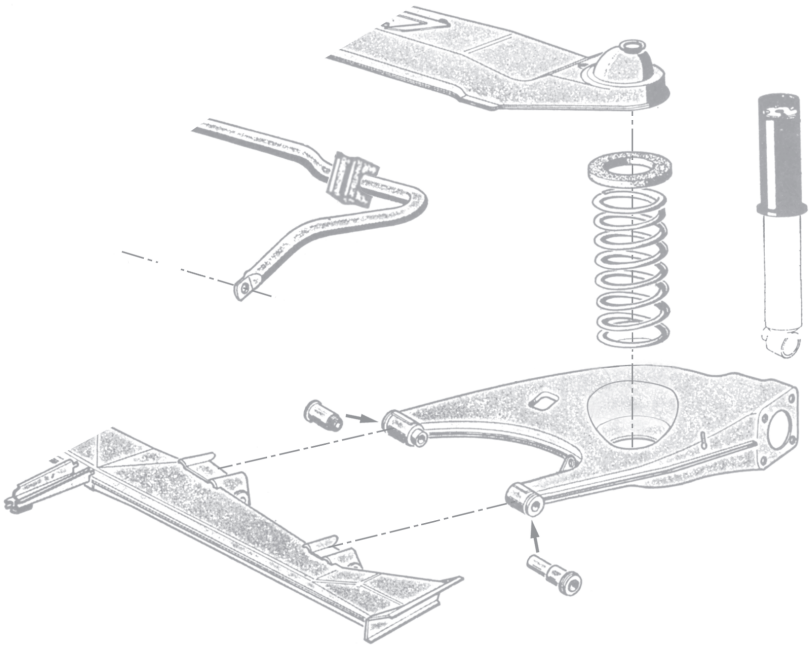
K150005
✓ 1.6, 1.8, 2.1D →Ch.3663934
K150011
✓ 1.6, 1.8, 2.1D Ch.3663935→
PE-ES-5703
01/80 →
PE-BJ-3195
01/80 →