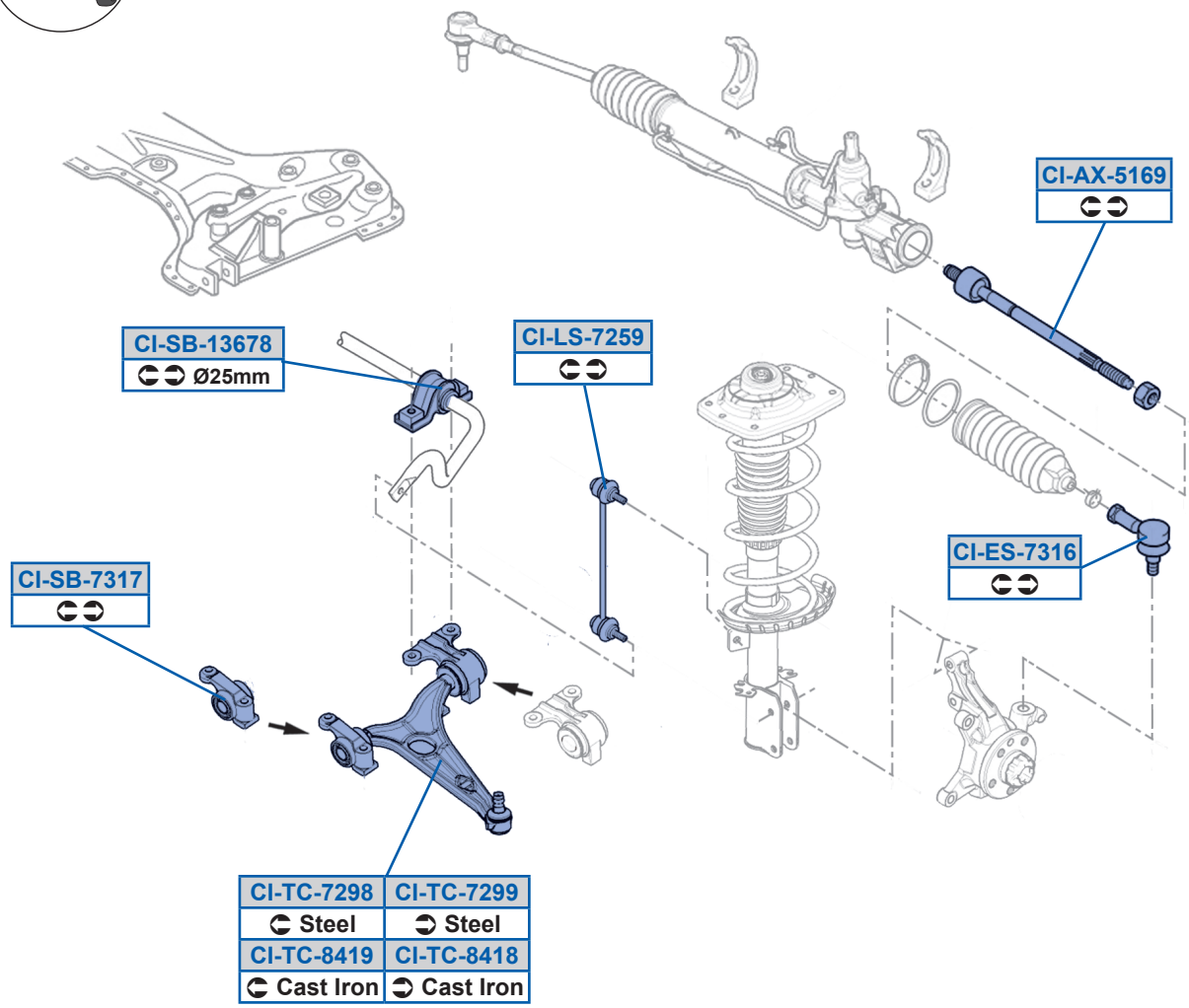
CI-AX-5169
CI-SB-13678
Ø25mm
CI-LS-7259
CI-ES-7316
CI-SB-7317
CI-TC-7298
Steel
CI-TC-7299
Steel
CI-TC-8419
Cast Iron
CI-TC-8418
Cast Iron

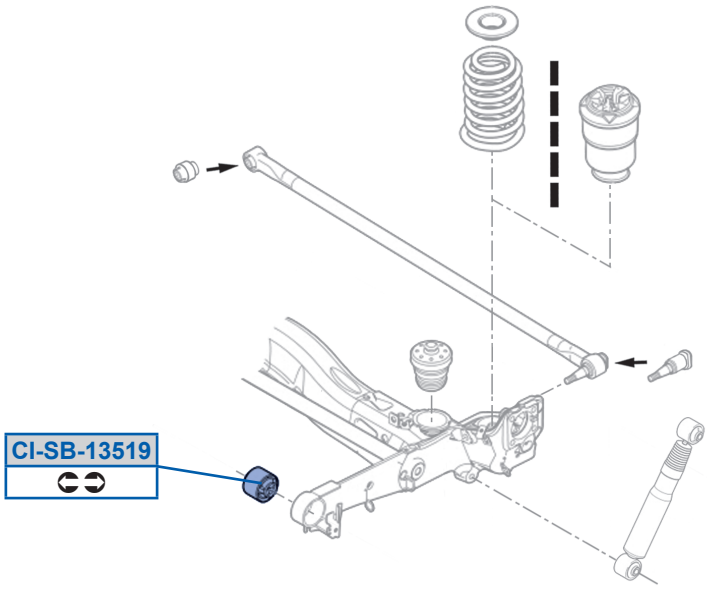
CI-SB-13519