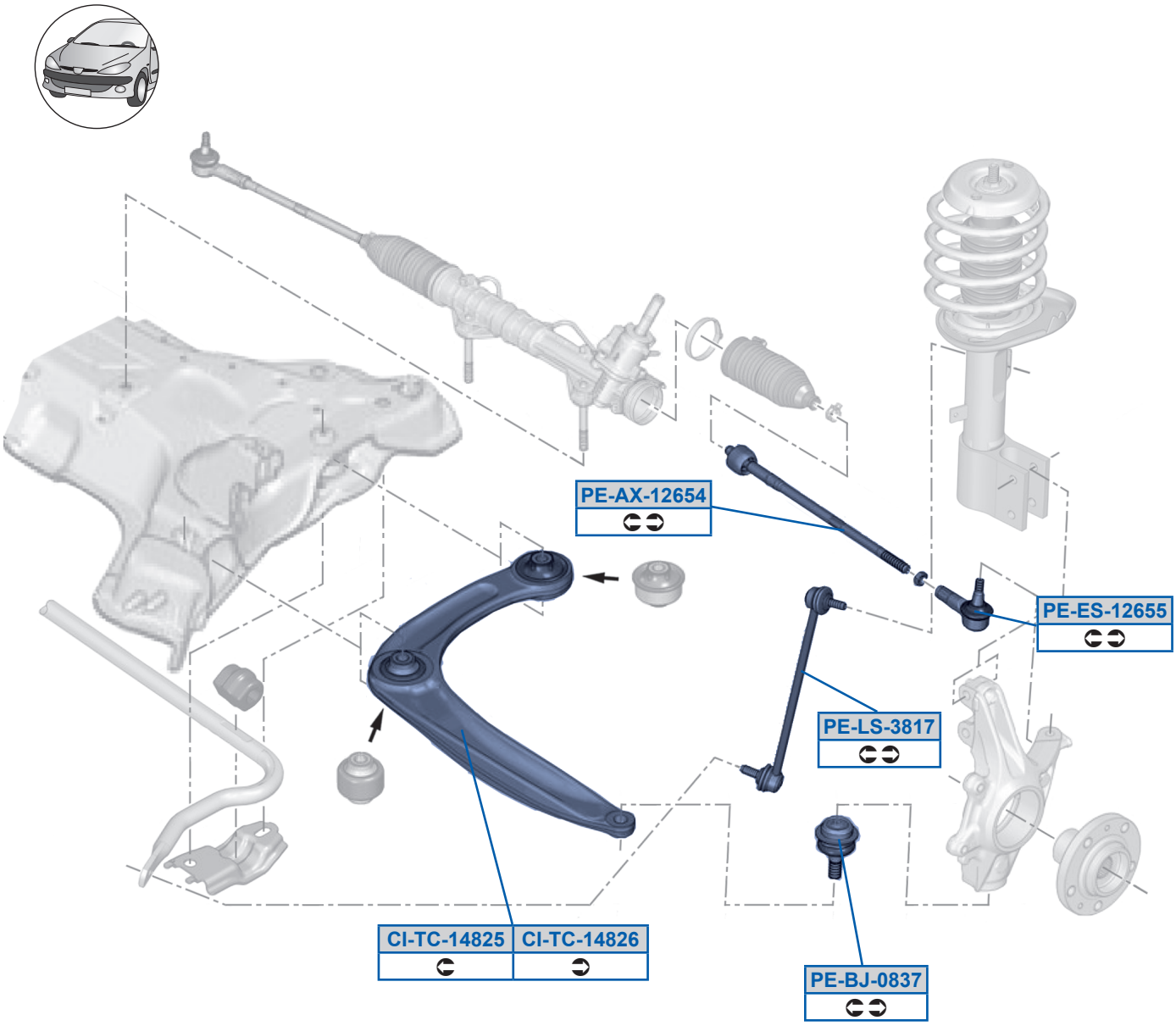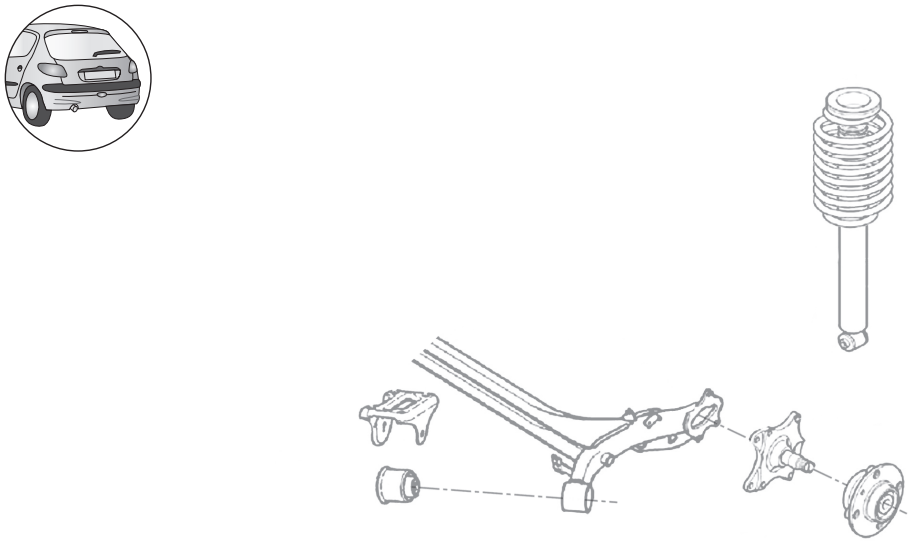
PE-AX-12654
PE-ES-12655
PE-LS-3817
CI-TC-14825
CI-TC-14826
PE-BJ-0837