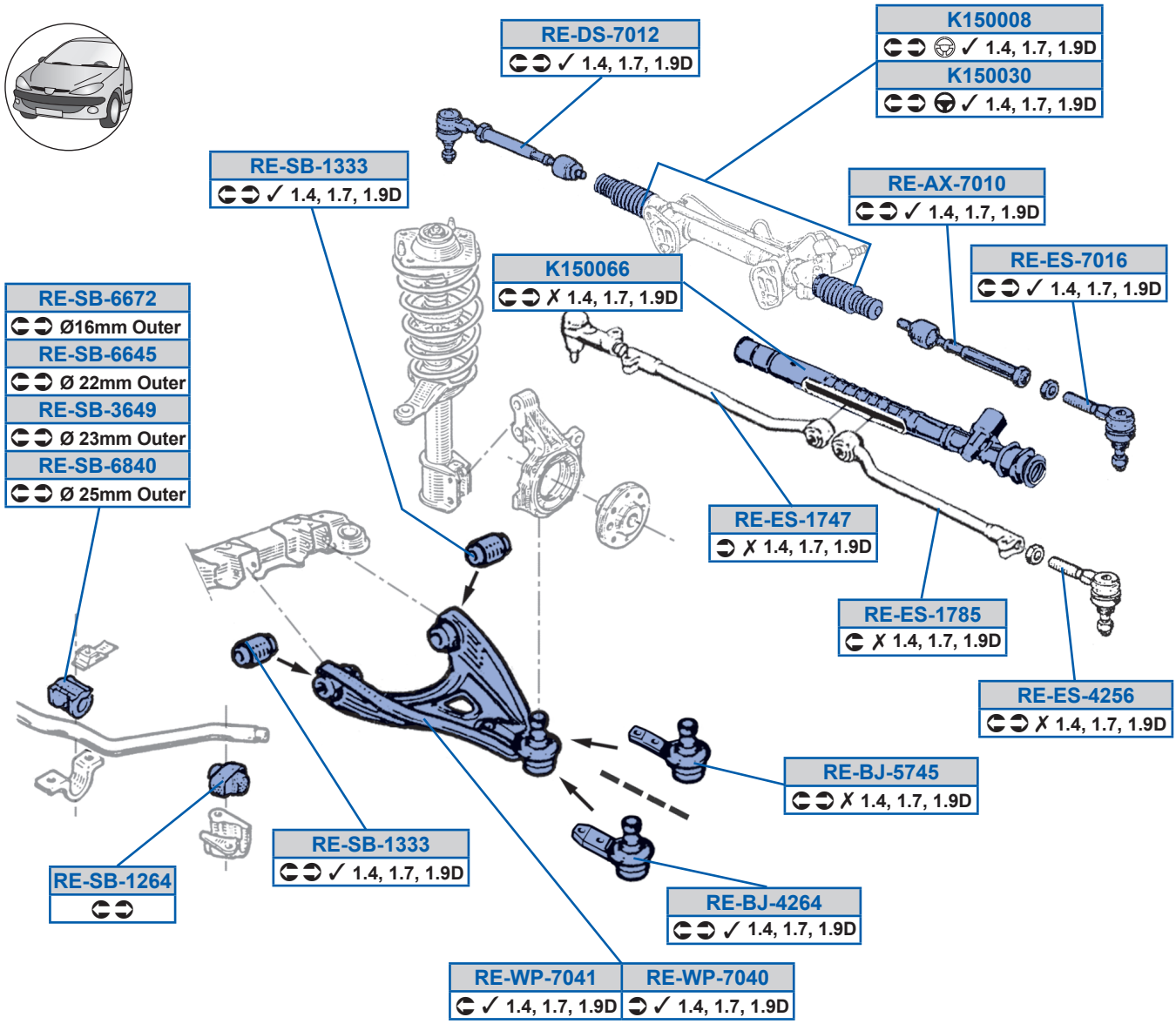
RE-DS-7012
✓ 1.4, 1.7, 1.9D
K150008
✓ 1.4, 1.7, 1.9D
K150030
✓ 1.4, 1.7, 1.9D
RE-SB-1333
✓ 1.4, 1.7, 1.9D
RE-AX-7010
✓ 1.4, 1.7, 1.9D
RE-ES-7016
✓ 1.4, 1.7, 1.9D
K150066
✗ 1.4, 1.7, 1.9D
RE-SB-6672
Ø16mm Outer
RE-SB-6645
Ø 22mm Outer
RE-SB-3649
Ø 23mm Outer
RE-SB-6840
Ø 25mm Outer
RE-ES-1747
✗ 1.4, 1.7, 1.9D
RE-ES-1785
✗ 1.4, 1.7, 1.9D
RE-ES-4256
✗ 1.4, 1.7, 1.9D
RE-BJ-5745
✗ 1.4, 1.7, 1.9D
RE-SB-1333
✓ 1.4, 1.7, 1.9D
RE-SB-1264
RE-BJ-4264
✓ 1.4, 1.7, 1.9D
RE-WP-7041
✓ 1.4, 1.7, 1.9D
RE-WP-7040
✓ 1.4, 1.7, 1.9D

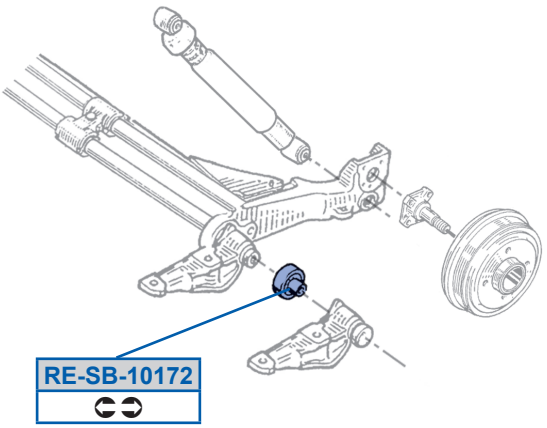
RE-SB-10172