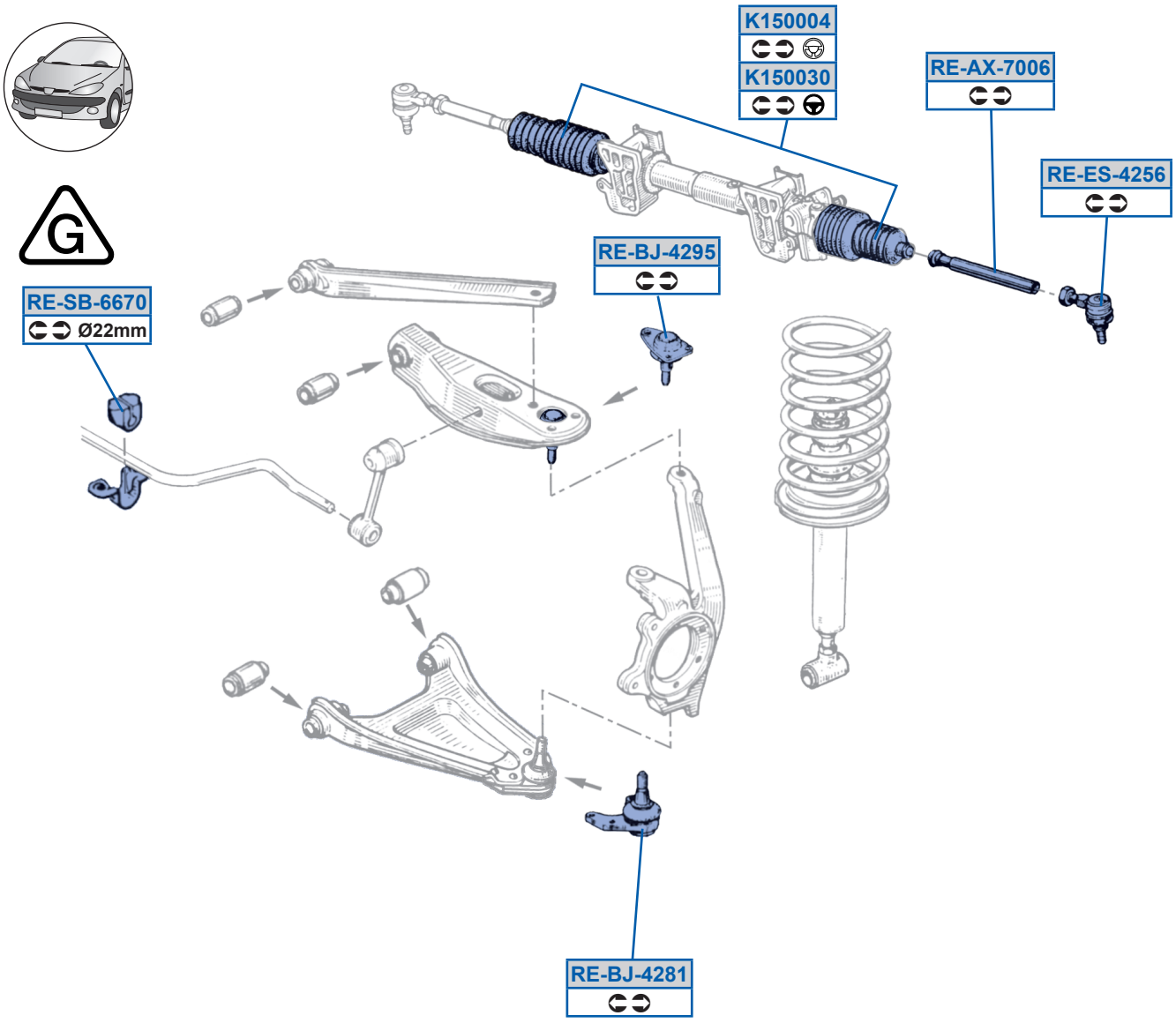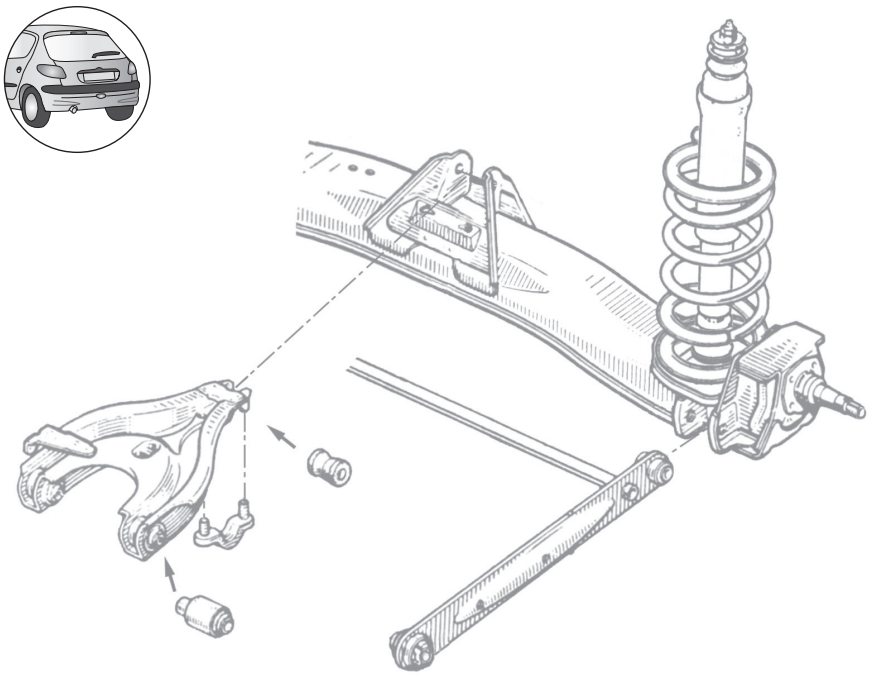
K150004
K150030
RE-AX-7006
RE-ES-4256
RE-BJ-4295
RE-SB-6670
Ø22mm
RE-BJ-4281