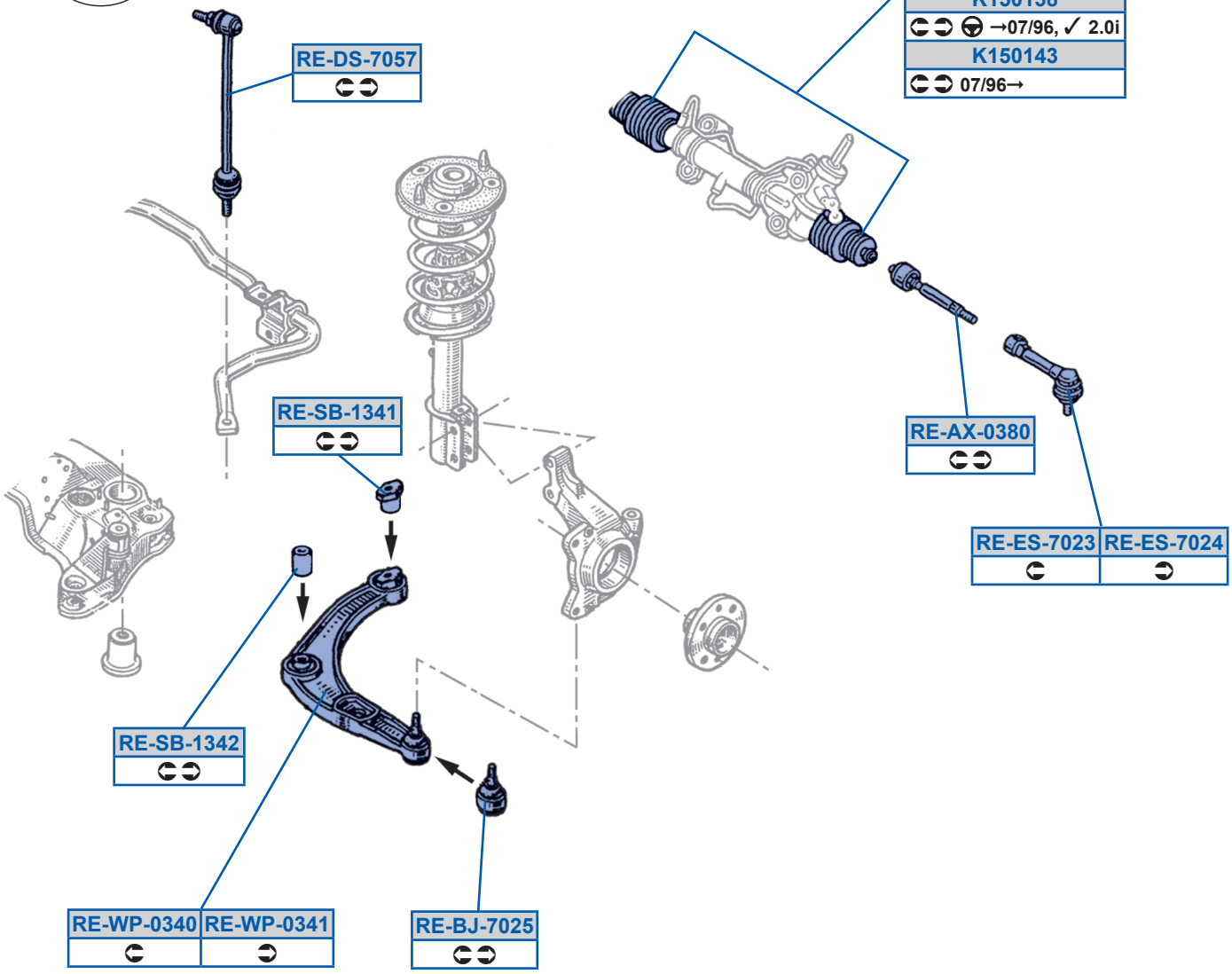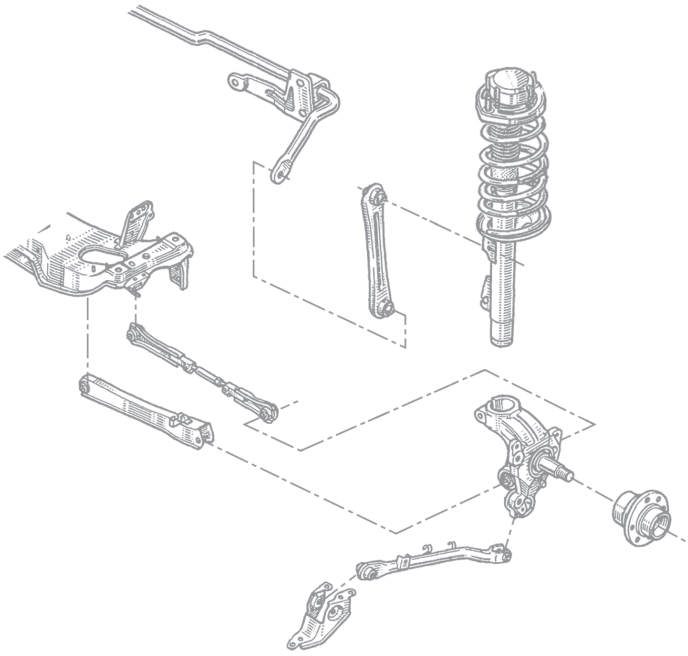
K150131
→07/96
K150135
→07/96, ✗ 2.0i
K150138
→07/96, ✓ 2.0i
K150143
07/96→
RE-DS-7057
RE-SB-1341
RE-AX-0380
RE-ES-7023
RE-ES-7024
RE-SB-1342
RE-WP-0340
RE-WP-0341
RE-BJ-7025