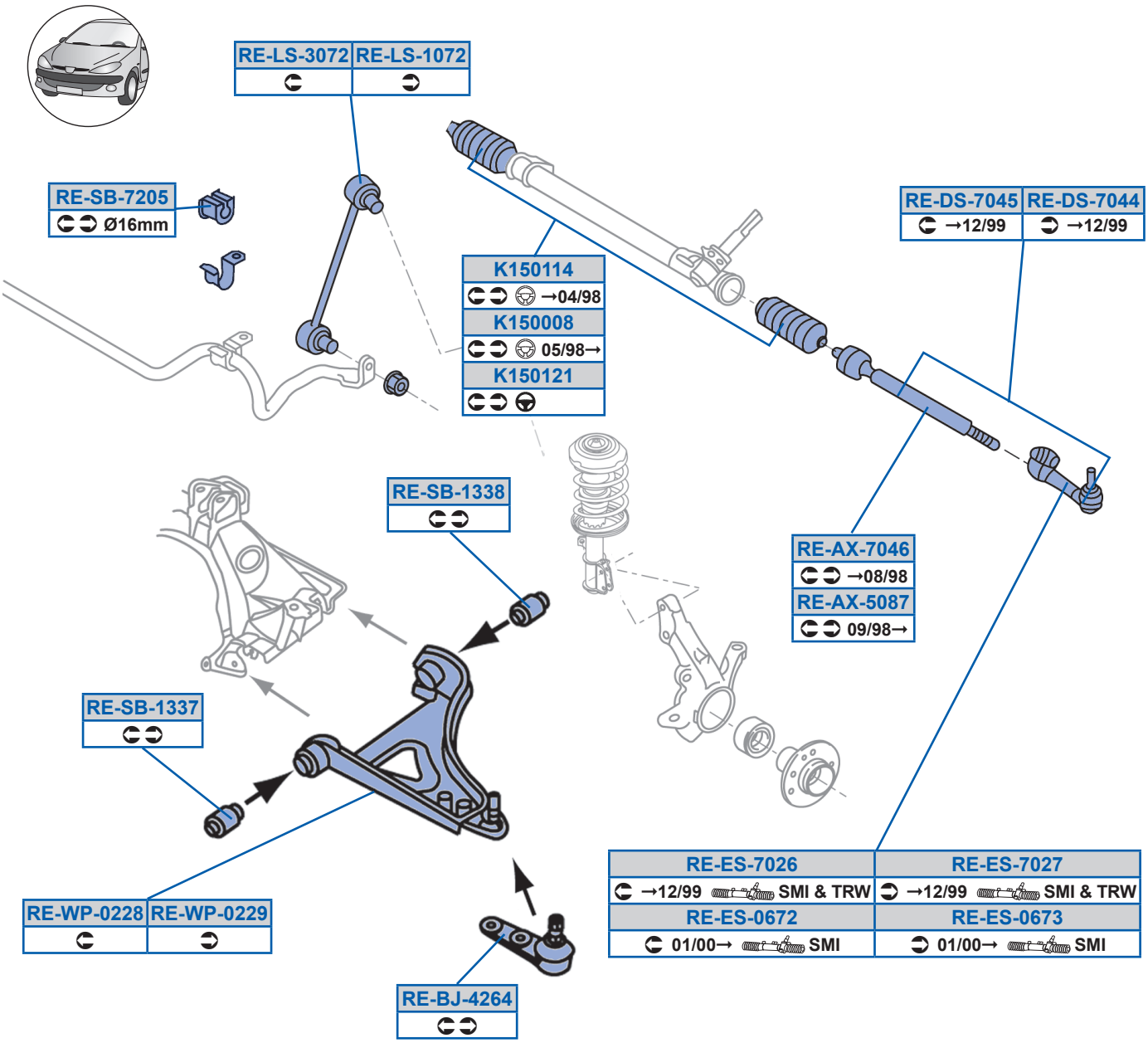
RE-LS-3072
RE-LS-1072
RE-SB-7205
Ø16mm
K150114
→04/98
K150008
05/98→
K150121
RE-DS-7045
→12/99
RE-DS-7044
→12/99
RE-SB-1338
RE-AX-7046
→08/98
RE-AX-5087
09/98→
RE-SB-1337
RE-ES-7026
→12/99
SMI & TRW
RE-ES-7027
→12/99
SMI & TRW
RE-ES-0672
01/00→
SMI
RE-ES-0673
01/00→
SMI
RE-WP-0228
RE-WP-0229
RE-BJ-4264

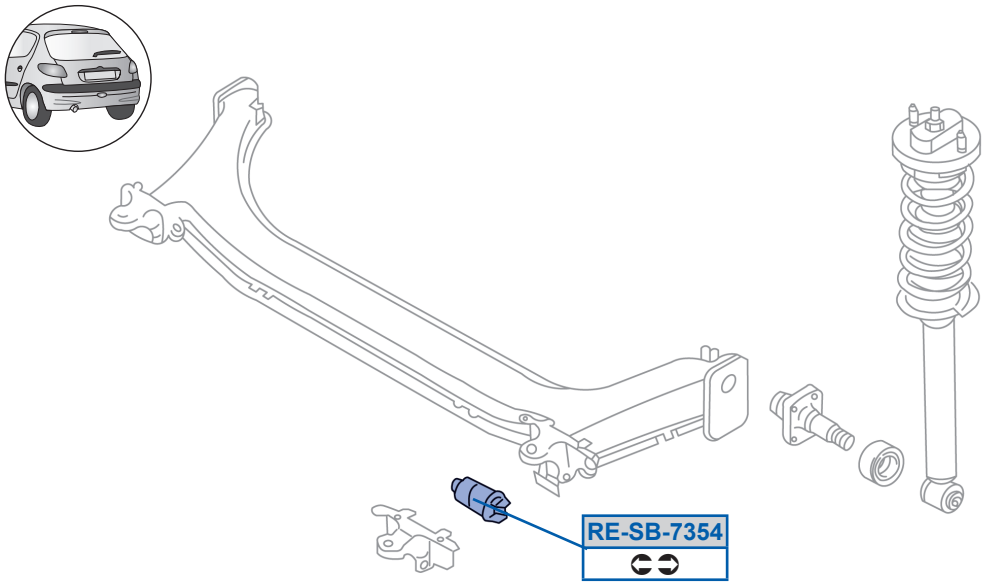
RE-SB-7354