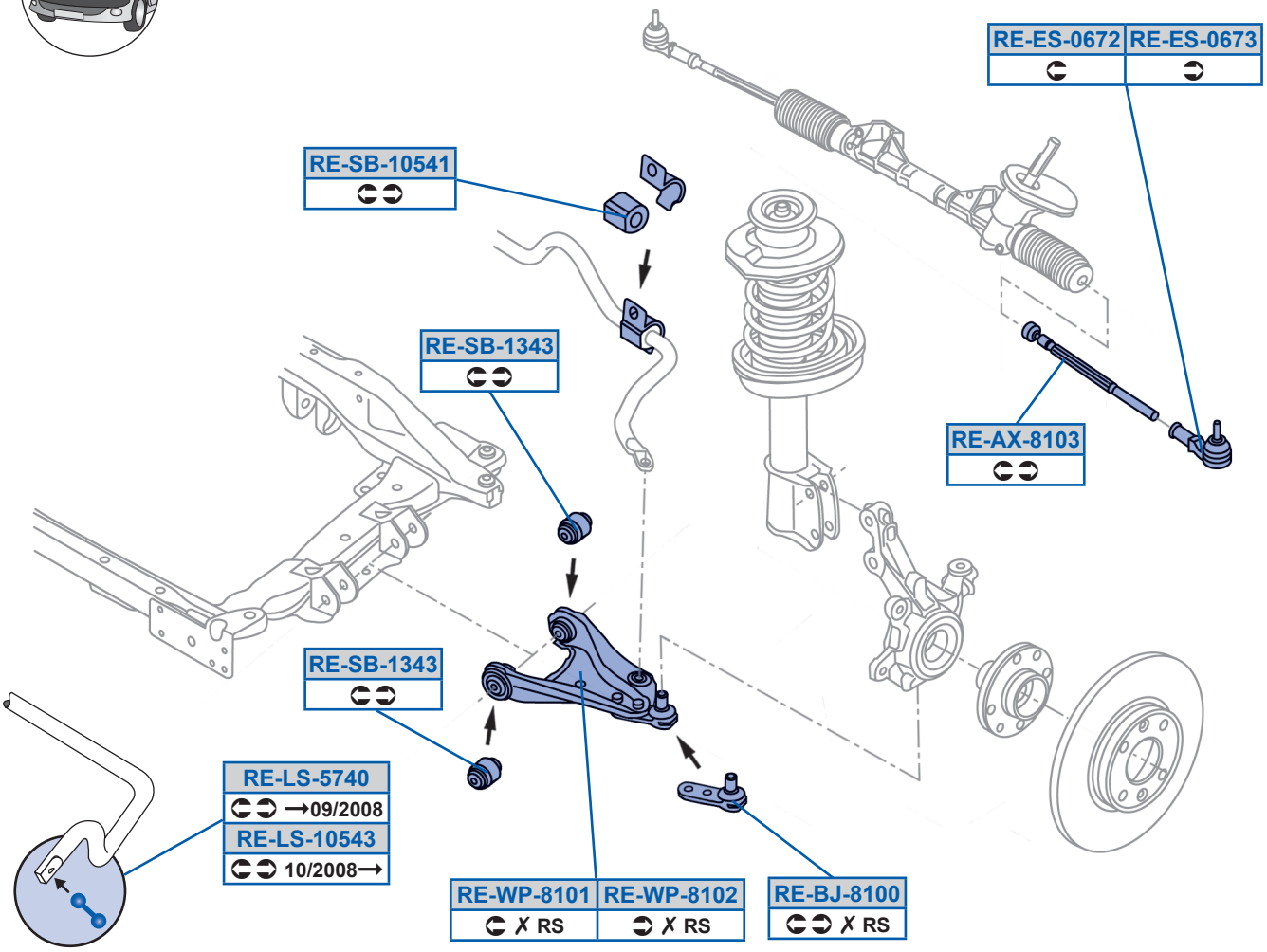
RE-ES-0672
RE-ES-0673
RE-SB-10541
RE-SB-1343
RE-AX-8103
RE-SB-1343
RE-LS-5740
→09/2008
RE-LS-10543
10/2008→
RE-WP-8101
✗ RS
RE-WP-8102
✗ RS
RE-BJ-8100
✗ RS

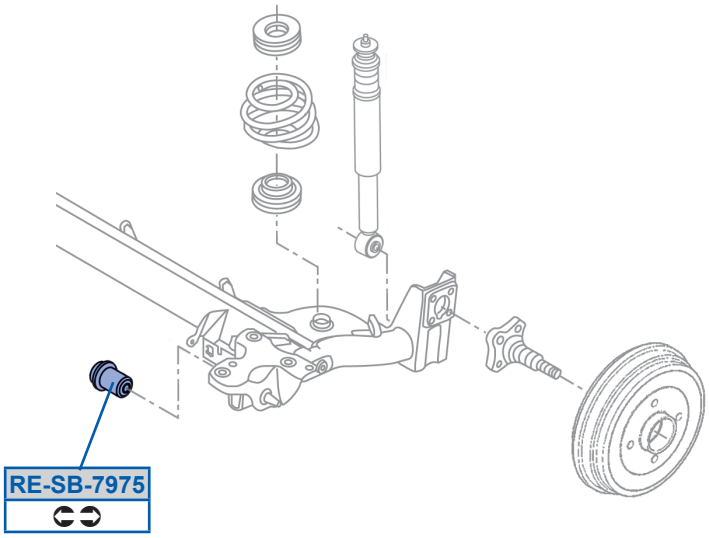
RE-SB-7975