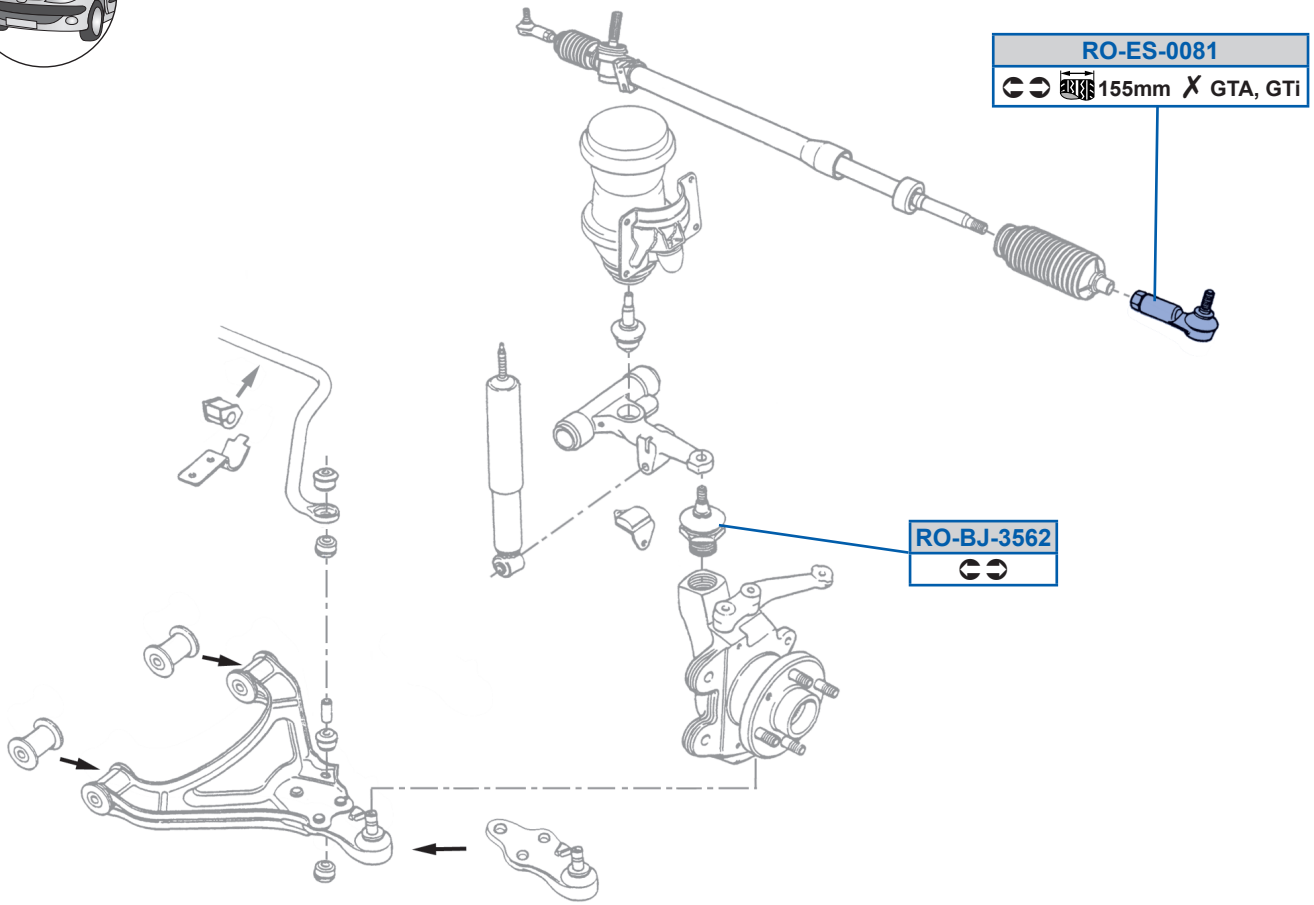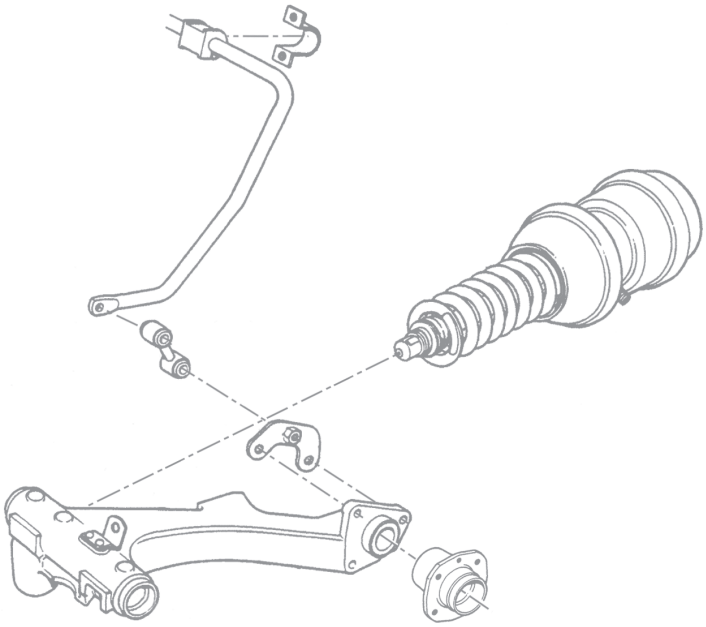
RO-ES-0081
155mm ✗ GTA, GTi
RO-BJ-3562