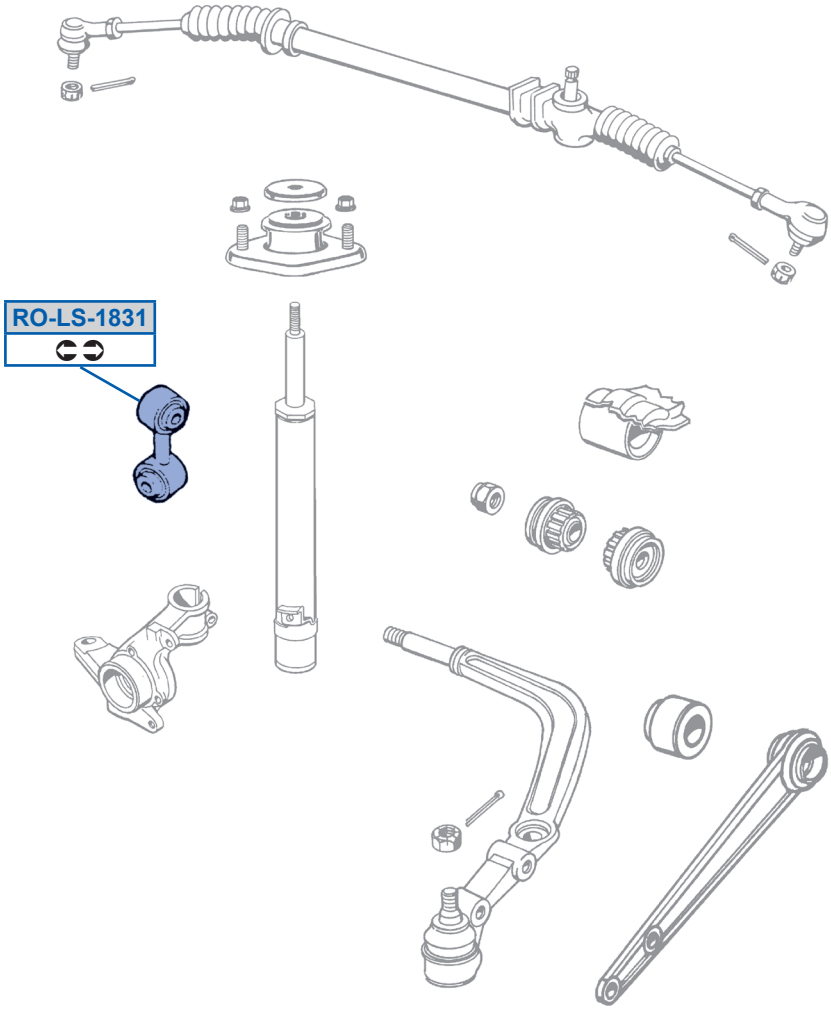
RO-LS-1831