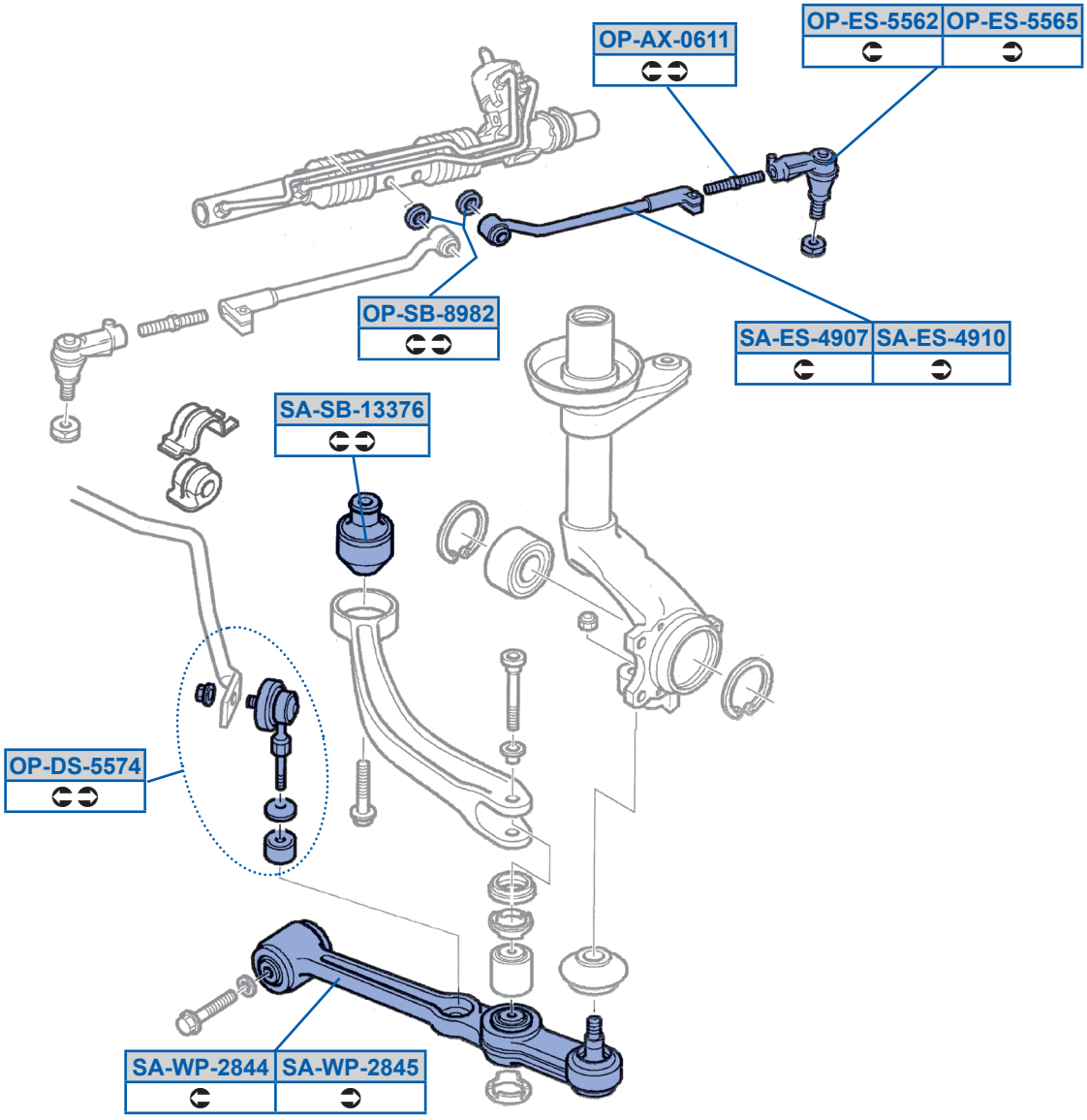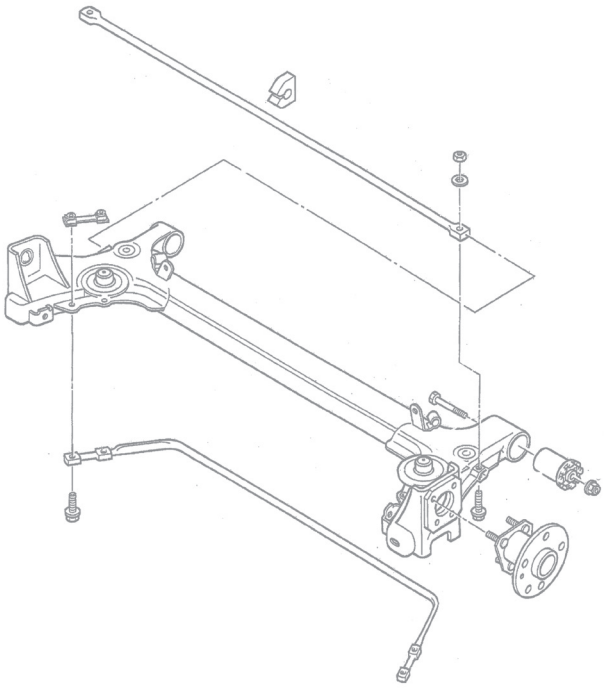
OP-AX-0611
OP-ES-5562
OP-ES-5565
OP-SB-8982
SA-ES-4907
SA-ES-4910
SA-SB-13376
OP-DS-5574
SA-WP-2844
SA-WP-2845