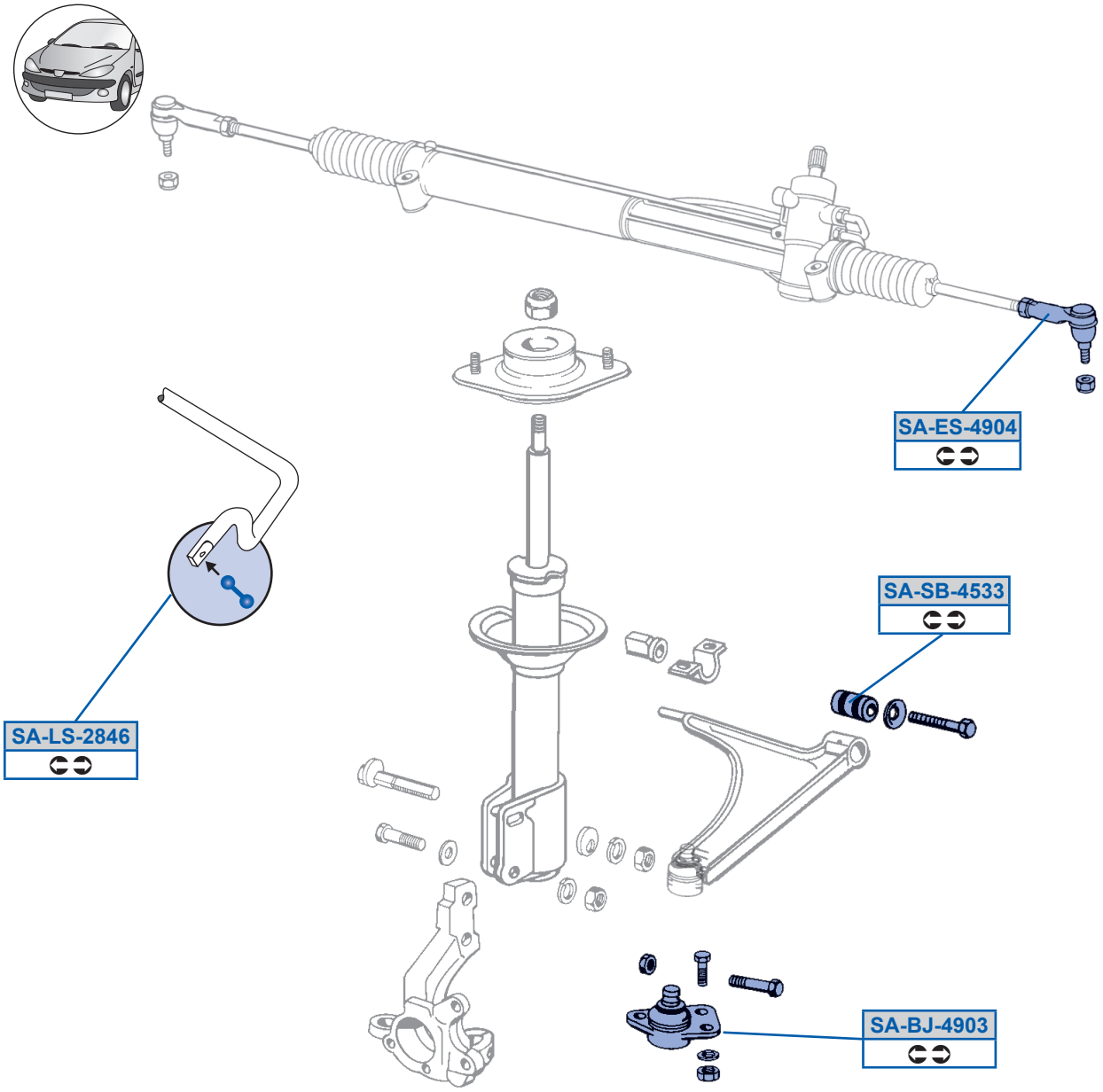
SA-ES-4904
SA-SB-4533
SA-LS-2846
SA-BJ-4903