K150187
✗ 1.9TDi RS (Eng ASZ) Ch. 6Y-3-736553→
K150235
✓ 1.9TDi RS (Eng ASZ) Ch. 6Y-3-736553→

AU-ES-3721	AU-ES-3723

VO-SB-7896
Ø16mm
VO-SB-7895
Ø17mm
VO-SB-7419
Ø18mm
VO-SB-7161
Ø20mm
AU-SB-7436
Ø20.8mm

VO-LS-0494

SE-AX-0091
TRW
VO-AX-12550
SMI

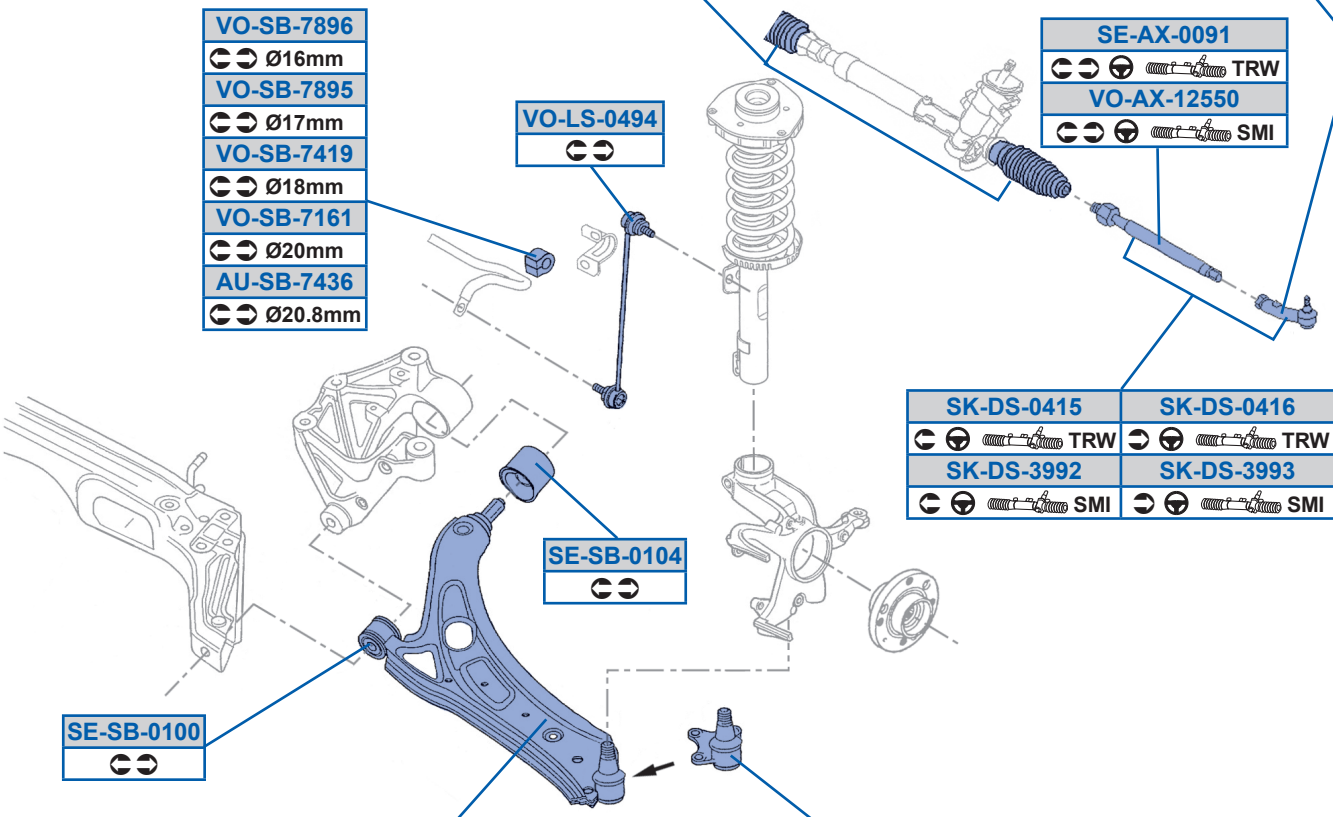

SK-DS-0415	SK-DS-0416
TRW	TRW
SK-DS-3992	**SK-DS-3993**
SMI	SMI

SE-SB-0104

SE-SB-0100

VO-WP-1116	VO-WP-1989

SK-BJ-0413	SK-BJ-0414

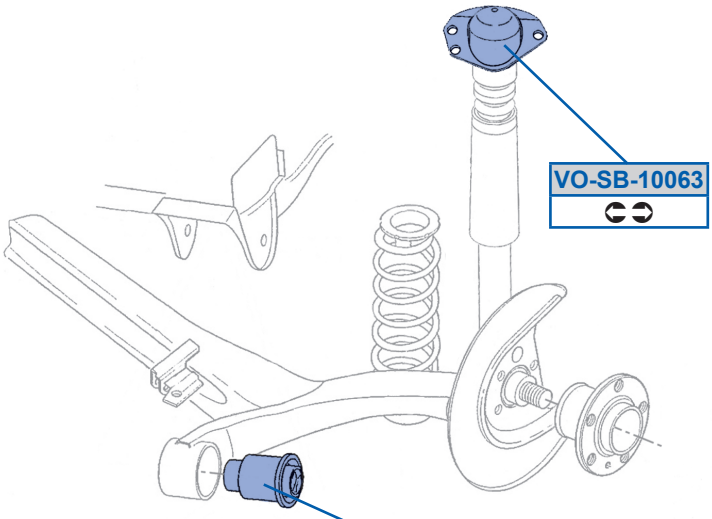

VO-SB-10063

VO-SB-0042	VO-SB-4857
✗ Accessories	✓Accessories