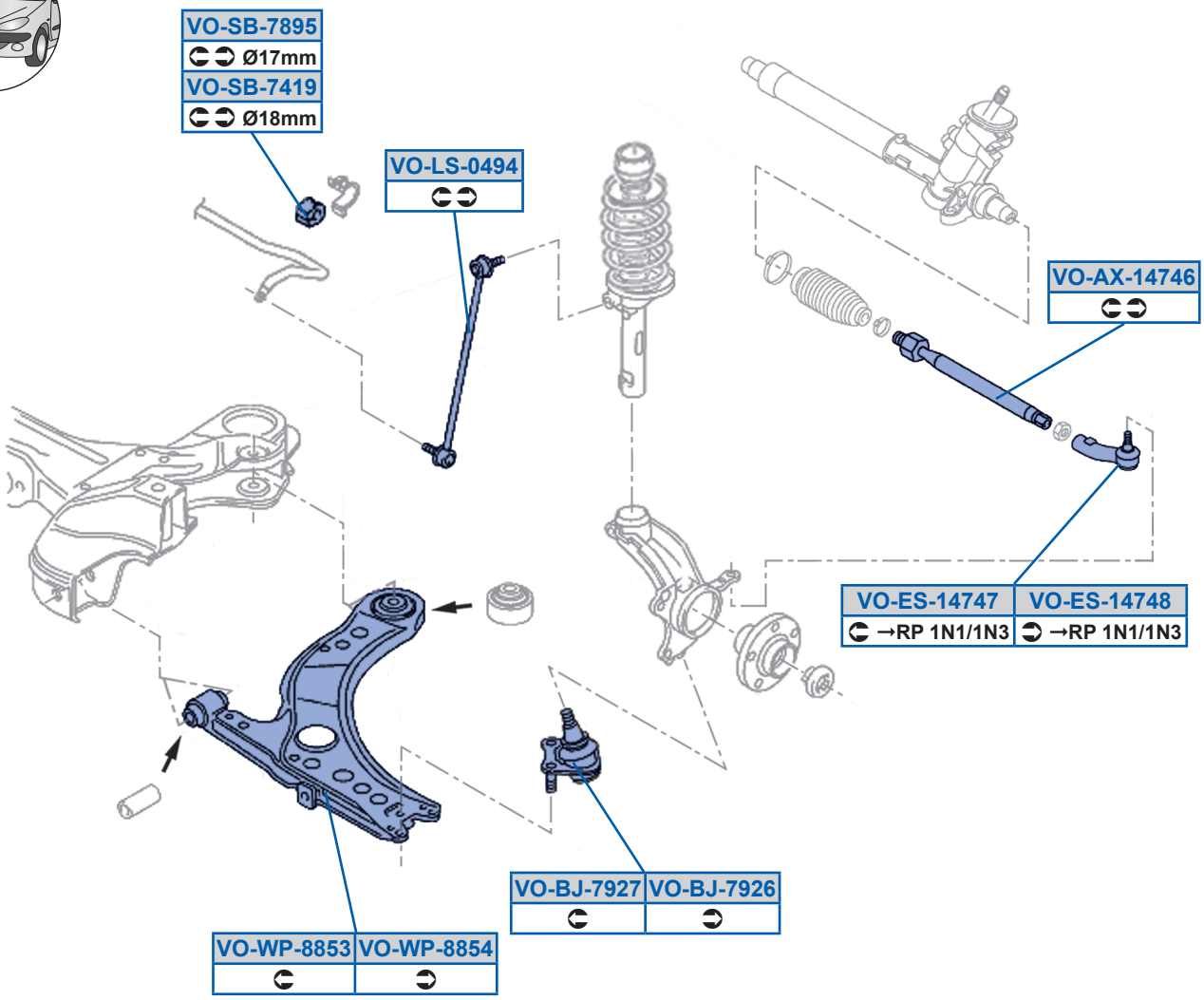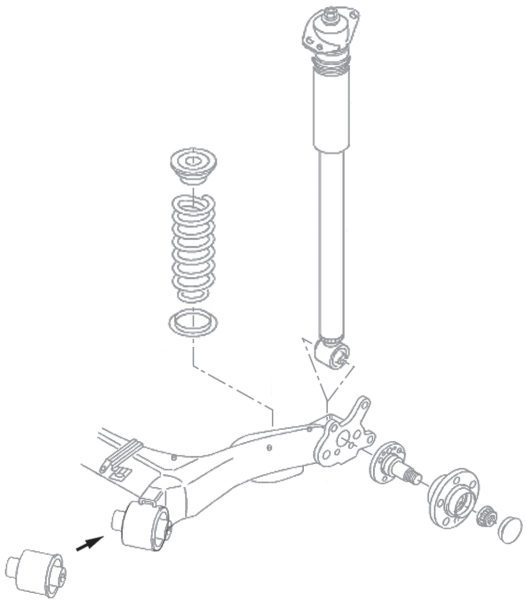
VO-SB-7895
Ø17mm
VO-SB-7419
Ø18mm
VO-LS-0494
VO-AX-14746
VO-ES-14747
→RP 1N1/1N3
VO-ES-14748
→RP 1N1/1N3
VO-BJ-7927
VO-BJ-7926
VO-WP-8853
VO-WP-8854