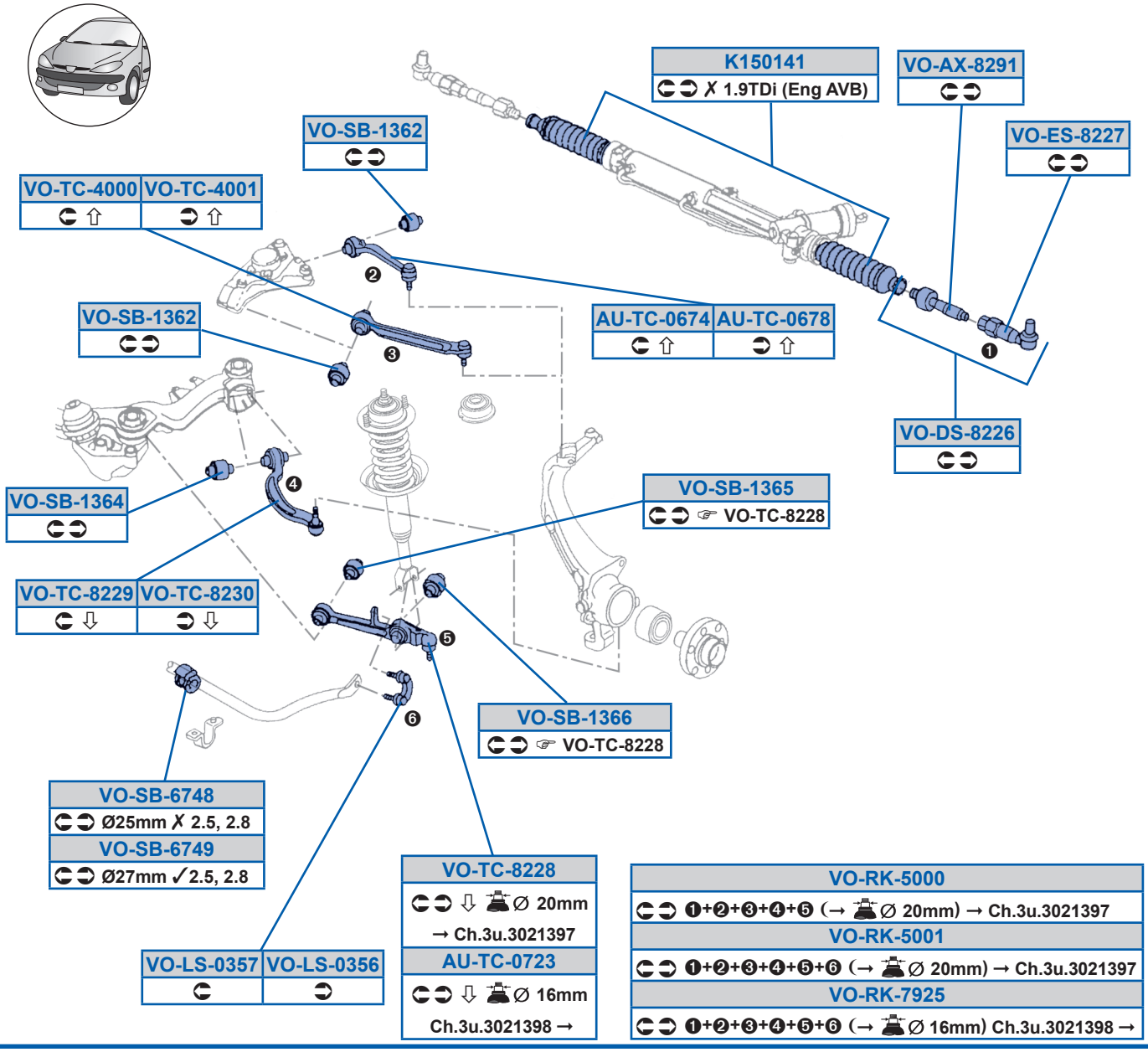
K150141
✗ 1.9TDi (Eng AVB)
VO-AX-8291
VO-ES-8227
VO-SB-1362
VO-TC-4000
VO-TC-4001
VO-SB-1362
AU-TC-0674
AU-TC-0678
VO-DS-8226
VO-SB-1364
VO-SB-1365
☞ VO-TC-8228
VO-TC-8229
VO-TC-8230
VO-SB-1366
☞ VO-TC-8228
VO-SB-6748
Ø25mm ✗ 2.5, 2.8
VO-SB-6749
Ø27mm ✓2.5, 2.8
VO-TC-8228
Ø 20mm
→ Ch.3u.3021397
AU-TC-0723
Ø 16mm
Ch.3u.3021398 →
VO-LS-0357
VO-LS-0356
VO-RK-5000
❶+❷+❸+❹+❺ (→ Ø 20mm) → Ch.3u.3021397
VO-RK-5001
❶+❷+❸+❹+❺+❻ (→ Ø 20mm) → Ch.3u.3021397
VO-RK-7925
❶+❷+❸+❹+❺+❻ (→ Ø 16mm) Ch.3u.3021398 →

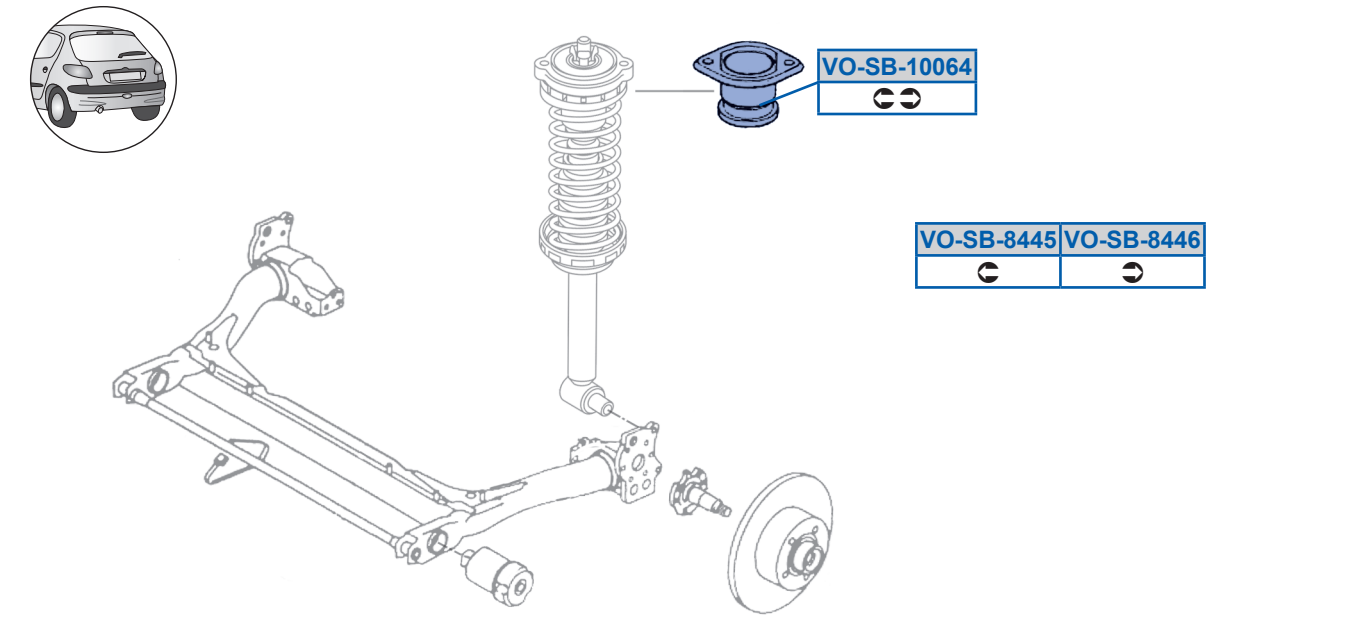
VO-SB-10064
VO-SB-8445
VO-SB-8446