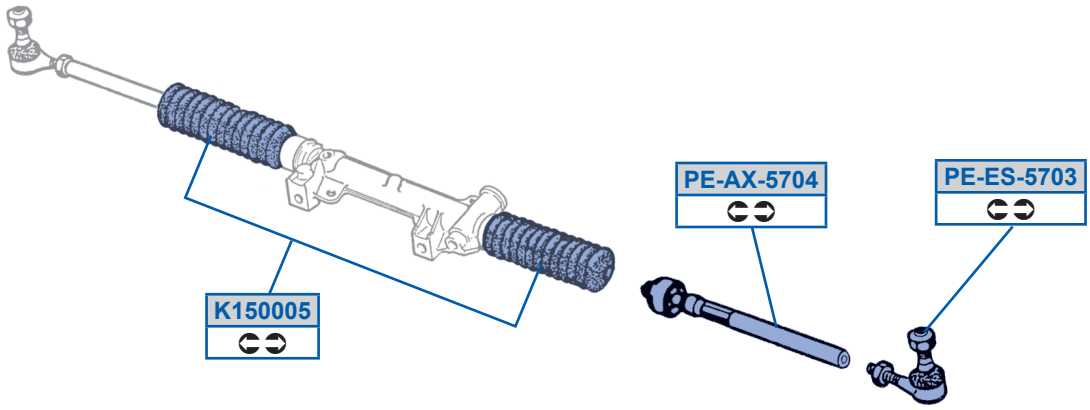
K150005
PE-AX-5704
PE-ES-5703

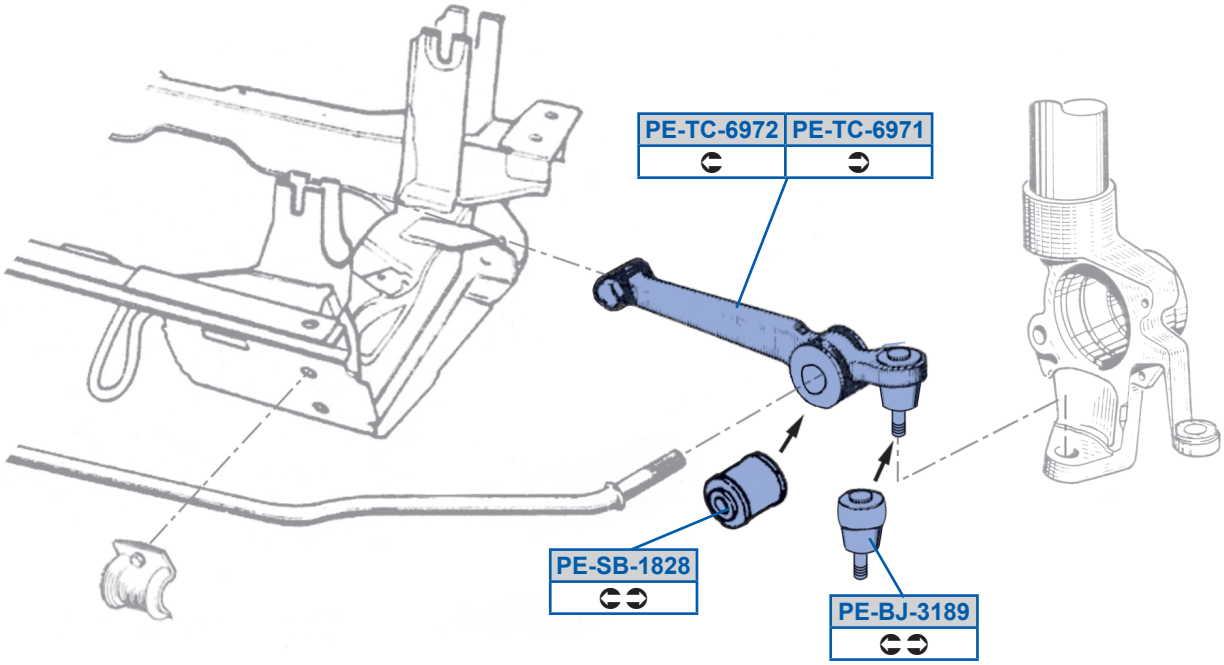
PE-TC-6972
PE-TC-6971
PE-SB-1828
PE-BJ-3189