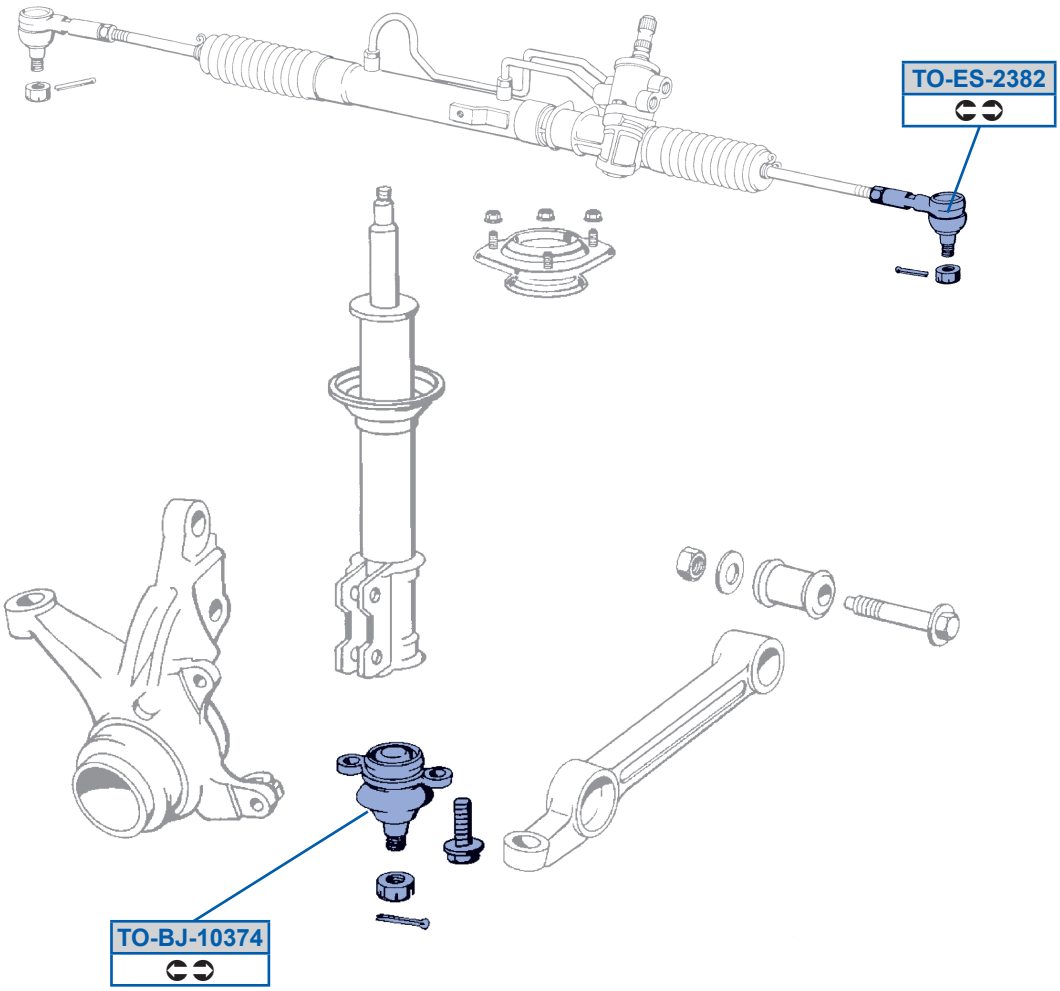
TO-ES-2382
TO-BJ-10374