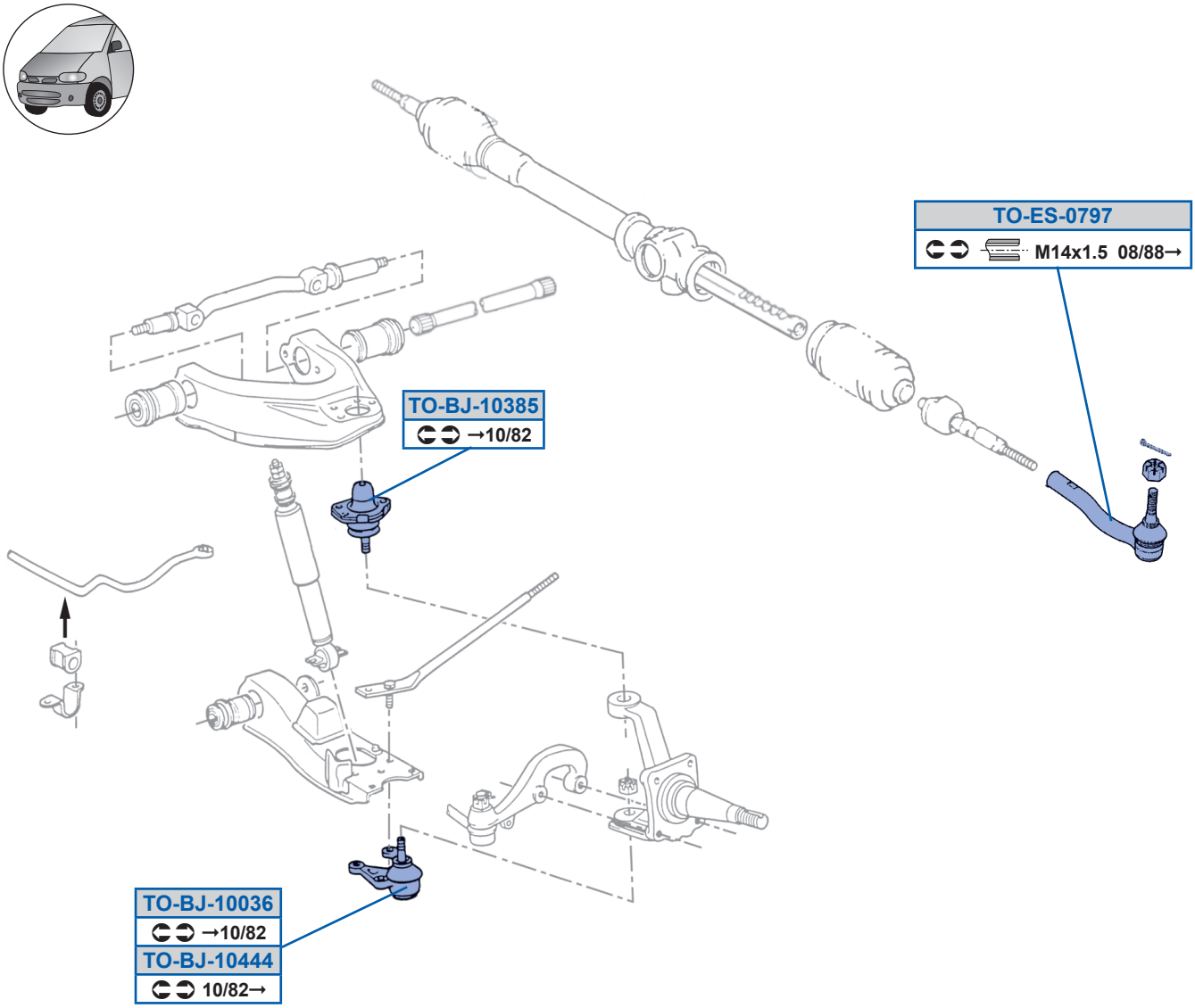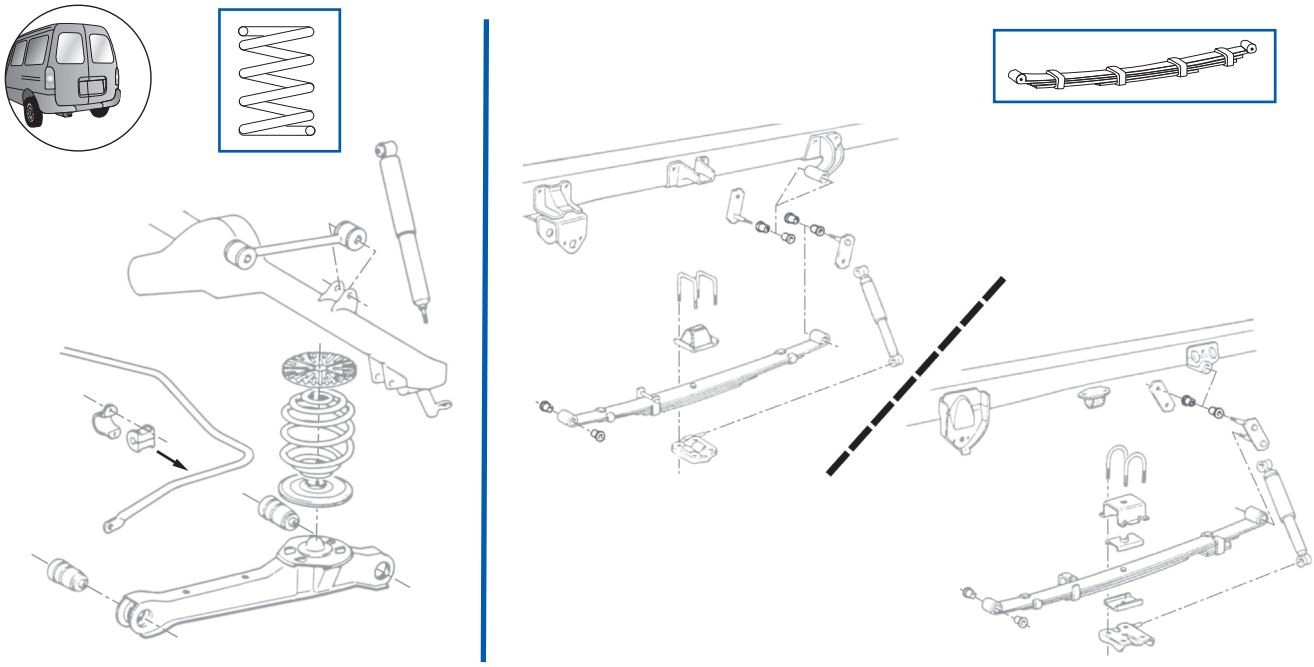
TO-ES-0797
M14x1.5 08/88→
TO-BJ-10385
→10/82
TO-BJ-10036
→10/82
TO-BJ-10444
10/82→